NORTHWESTERN WATER & SEWER DISTRICT

WILLOWBEND PUMP STATION IMPROVEMENTS

SS-307

2021

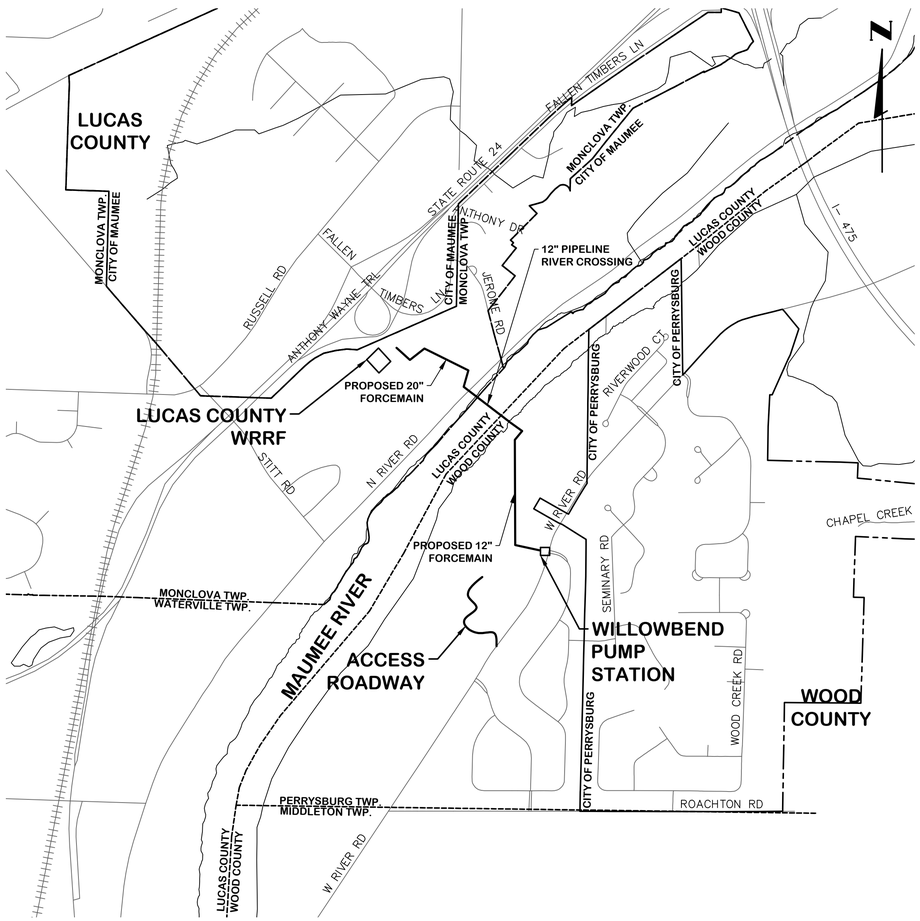

LOCATION MAP

0 500 1000 2000
SCALE IN FEET

BOARD OF TRUSTEES

MARK SHEFFER - CHAIRMEN
J. DOUGLAS MILLER, P.E. - VICE CHAIRMAN
MELINDA KALE - SECRETARY

WILLIAM HIRZEL
JOHN A. CHENEY
CHARLES LATTA
STEVE ARNOLD
BILL BARNHART
BROOKE HAHN
TIM PHILLIPS

ENGINEER:
JONES & HENRY ENGINEERS, LTD.
3103 EXECUTIVE PARKWAY
SUITE 300
TOLEDO, OHIO 43606

CLIENT:
NORTHWESTERN WATER AND SEWER DISTRICT
12560 MIDDLETON PIKE
P.O. BOX 348
BOWLING GREEN, OHIO 43402

STATE OF OHIO
THEODORE A. BENNETT
E-70768
REGISTERED PROFESSIONAL ENGINEER

8/18/2020

APPROVED BY:

JERRY R. GREINER	PRESIDENT	8-24-20 DATE
THOMAS E. STALTER, P.E.	DISTRICT ENGINEER	8/24/20 DATE
GARRET T. CHAMBERLAIN, P.E.	ASSISTANT ENGINEER	8/24/2020 DATE
DAN WICKARD	SUPERINTENDENT	8/24/2020 DATE

DISTRICT SPECIFICATIONS NOTE
THE CONTRACTOR SHALL BRING ANY DISCREPANCIES BETWEEN THE PROJECT SPECIFICATIONS AND THE NWSD STANDARD SPECIFICATIONS AND DETAILS TO THE ENGINEER'S ATTENTION.

CLEAN WATER CONNECTIONS PROHIBITED
ROOF DRAINS, FOUNDATION DRAINS, SUMP PUMPS, STORM SEWERS, CATCH BASINS AND OTHER CLEAN WATER CONNECTIONS TO THE SANITARY SEWER ARE PROHIBITED.

Ohio Utilities Protection Service
Call 811 before you dig

Jones & Henry Engineers, Ltd.
Fluid thinking©.
www.JHeng.com

STATUS: ISSUED FOR BID
DATE: AUGUST 2021

TOL-7215\002\COV-COVER
8/26/2020 8:55 AM - BDRILL
8/26/2020 8:00 AM

TOPOGRAPHY LEGEND

TOPOGRAPHY LINES:

- CENTER LINE
- FENCE LINE
- PROPERTY LINE
- RIGHT OF WAY
- PERMANENT EASEMENT
- CONSTRUCTION EASEMENT
- SILT FENCE

UTILITY LINES:

- CABLE (UNDERGROUND)*
- COMBINED SEWER
- ELECTRICAL (UNDERGROUND)*
- GAS LINE
- OVERHEAD WIRES
- SANITARY SEWER
- SIGNAL (UNDERGROUND)*
- STORM SEWER
- TELEPHONE (UNDERGROUND)*
- WATER LINE
- LARGE DIAMETER LINES (ANY TYPE)
- UTILITY LINE TO BE REMOVED
- UTILITY LINE TO BE ABANDONED
- PROPOSED SEWER

ALPHA DESIGNATION REFERS TO UTILITY TYPE, NUMERICAL DESIGNATION REFERS TO PIPE NOMINAL DIAMETER. LINES WITH NO NUMERICAL DESIGNATION ARE OF UNKNOWN SIZE.

* AERIAL LINES, IF SHOWN, ARE DESIGNATED WITH LOWER CASE LETTERS
** FOR ELLIPTICAL SEWERS, THE VERTICAL DIMENSION (RISE) IS CALLED OUT FIRST FOLLOWED BY THE HORIZONTAL DIMENSION (SPAN). EXAMPLE: 45X35 (RISE X SPAN) THE VERTICAL DIMENSION IS 45", THE HORIZONTAL DIMENSION IS 35".

NOTE: ACCURACY OF EXISTING ELEVATIONS AND DIMENSIONS IS NOT GUARANTEED. FIELD VERIFY BEFORE CONSTRUCTION.

SYMBOLS:

- GAS VALVE
- CLEANOUT
- SANITARY MANHOLE
- UNKNOWN MANHOLE
- FLAG
- BOLLARD
- SIGN
- POST
- BENCHMARK/CONTROL POINT
- POWER POLE
- POWER AND TELEPHONE POLE
- TELEPHONE, LIGHT AND POWER POLE
- GUY WIRE
- DECIDUOUS TREE
- CONIFEROUS TREE
- VALVE BOX TO BE ABANDONED, SEE DETAIL ON SHEET W-0.1 MARKED AS "ABANDON VALVE"
- MANHOLE
- POWER POLE OR TELEPHONE POLE
- POLE TO BE TEMPORARILY SUPPORTED AND PROTECTED BY CONTRACTOR
- FIRE HYDRANT OR YARD HYDRANT
- VALVE
- CLEAN OUT
- IRON PIN (OR LABELED POST, MARKER ETC.)
- CATCH BASIN
- FIRE HYDRANT TO BE REMOVED
- TREE TO BE REMOVED
- STUMP TO BE REMOVED
- TC - TOP OF CURB ELEVATION
  G - GUTTER ELEVATION
- SPOT ELEVATION
  *POINT OF ELEVATION IS DECIMAL
- FORCE MAIN FLUSHING CONNECTION
- VALVE MANHOLE TO BE ABANDONED, SEE DETAIL ON SHEET W-0.1 MARKED AS "ABANDON VALVE MANHOLE"
- WATER MAIN PLUG, SEE PLUG DETAIL ON SHEET W-0.1. FOR PLUGS WITH "T/A" DESIGNATION SEE TERMINATION & ABANDONMENT DETAILS ON SHEET W-0.1.
- CONTROL POINT
- BENCHMARK
- WATER VALVE MANHOLE OR BOX TO BE ABANDONED, SEE SPECIFICATIONS
- WATER METER
- WATER MANHOLE
- WATER VALVE
- NEW VALVE MANHOLE
- NEW GATE VALVE AND BOX
- EXISTING BUILDING
- EMERGENT WETLAND DELINEATION LIMITS
- FORESTED WETLAND DELINEATION LIMITS

STORM WATER POLLUTION PREVENTION

- RCE — ROADWAY CONSTRUCTION ENTRANCE
- IP — INLET PROTECTION
- SILT FENCE

GENERAL

1	G-1	LEGENDS AND INDEX
2	G-2	LAYOUT SHEET
3	G-3	CONSTRUCTION ACCESS PLAN
4	G-4	GENERAL SUMMARY

SITE WORK

5	PS-1	PUMP STATION SITE PLAN
6	PS-2	PUMP STATION SITE GRADING PLAN
7	PS-3	PUMP STATION BYPASS PUMPING PLAN AND DETAILS

REMOVALS

8	R-1	PUMP STATION - REMOVALS

STRUCTURAL

9	S-1	GENERATOR PAD - STRUCTURAL - PLAN AND SECTIONS
10	S-2	SANITARY SEWER PUMP STATION -STRUCTURAL - SECTION AND DETAIL

PIPING AND EQUIPMENT

11	PE-1	SANITARY SEWER PUMP STATION - PIPING AND EQUIPMENT - SECTIONAL PLAN
12	PE-2	SANITARY SEWER PUMP STATION - PIPING AND EQUIPMENT - PLAN
13	PE-3	SANITARY SEWER PUMP STATION - PIPING AND EQUIPMENT - SECTIONS
14	PE-4	PIPING AND EQUIPMENT - DETAILS
15	PE-5	PIPING AND EQUIPMENT - DETAILS
16	PE-6	PIPING AND EQUIPMENT - DETAILS
17	PE-7	PIPING AND EQUIPMENT - DETAILS

FORCE MAIN

18	FM-0.1	FORCE MAIN AND SEWER GENERAL NOTES
19	FM-0.2	FORCE MAIN AND SEWER GENERAL NOTES
20	FM-0.3	FORCE MAIN AND SEWER DETAILS
21	FM-0.4	FORCE MAIN AND SEWER DETAILS
22	FM-0.5	FORCE MAIN AND SEWER DETAILS
23	FM-0.6	FORCE MAIN AND SEWER DETAILS
24	FM-1.1	EASEMENT - FORCE MAIN - PLAN AND PROFILE - STA 0+00 TO 5+50
25	FM-1.2	WILLOWBEND HOMEOWNERS ASSOCIATION EASEMENT - FORCE MAIN - PLAN AND PROFILE - STA 5+50 TO 11+00
26	FM-1.3	WILLOWBEND HOMEOWNERS ASSOCIATION EASEMENT - FORCE MAIN - PLAN AND PROFILE - STA 11+00 TO 16+50
27	FM-1.4	WILLOWBEND HOMEOWNERS ASSOCIATION EASEMENT - FORCE MAIN - PLAN AND PROFILE - STA 16+50 TO 22+00
28	FM-1.5	PHIBBS EASEMENT AND RIVER CROSSING - FORCE MAIN - PLAN AND PROFILE - STA 22+00 TO 27+50
29	FM-1.6	EASEMENT - FORCE MAIN - PLAN AND PROFILE - STA 27+50 TO 31+50
30	FM-1.7	WOTRING EASEMENT AND NORTH RIVER ROAD - FORCE MAIN - PLAN AND PROFILE - STA 31+50 TO 37+00
31	FM-1.8	EASEMENT - FORCE MAIN - PLAN AND PROFILE - STA 37+00 TO 42+50
32	FM-1.9	EASEMENT - FORCE MAIN - PLAN AND PROFILE - STA 42+50 TO 44+00
33	FM-2.1	JEROME ROAD - FORCE MAIN - PLAN AND PROFILE - STA 0+00 TO 2+00
34	FM-3.1	WEST RIVER ROAD - FORCE MAIN INTERCONNECTION - PLAN - STA 0+00 TO 5+50

ROADWAY

35	RW-1.1	WILLOWBEND ACCESS ROAD - ROADWAY - PLAN AND PROFILE - STA 0+00 TO 5+50
36	RW-1.2	WILLOWBEND ACCESS ROAD - ROADWAY - PLAN AND PROFILE - STA 5+50 TO 11+00
37	RW-1.3	WILLOWBEND ACCESS ROAD - ROADWAY - PLAN AND PROFILE - STA 11+00 TO 16+50

CROSS SECTIONS

38	CS-1.1	WILLOWBEND ACCESS ROAD - CROSS SECTIONS - STA 0+00 TO 2+25
39	CS-1.2	WILLOWBEND ACCESS ROAD - CROSS SECTIONS - STA 2+25 TO 4+75
40	CS-1.3	WILLOWBEND ACCESS ROAD - CROSS SECTIONS - STA 5+00 TO 7+25
41	CS-1.4	WILLOWBEND ACCESS ROAD - CROSS SECTIONS - STA 7+32 TO 9+25
42	CS-1.5	WILLOWBEND ACCESS ROAD - CROSS SECTIONS - STA 9+43 TO 11+50
43	CS-1.6	WILLOWBEND ACCESS ROAD - CROSS SECTIONS - STA 11+75 TO 13+00

ELECTRICAL

44	E-1	ELECTRICAL LEGEND
45	E-2	ELECTRICAL - SITE PLAN
46	E-3	ELECTRICAL - SINGLE LINE
47	E-4	SANITARY SEWER PUMP STATION - ELECTRICAL - PLAN
48	E-5	ELECTRICAL - DETAILS

EROSION CONTROL

49	EC-1	EROSION CONTROL DETAILS
50	EC-2	EROSION CONTROL DETAILS

NORTHWESTERN THE DISTRICT WATER & SEWER

LEGENDS AND INDEX

NORTHWESTERN WATER AND SEWER DISTRICT,
WILLOWBEND PUMP STATION IMPROVEMENTS, SS-307

NO.	DATE	REVISIONS AFTER ISSUED FOR BID	BY
5			
4			
3			
2			
1			

Jones & Henry Engineers, Ltd.
Fluid thinking©.
www.JHeng.com

JOB NO. 796-7215.002

SCALE NONE

THIS LINE SCALES 1" WHEN PLOTTED TO NOTED SCALE

DESIGNED	DRAWN	CHECKED
TAB	BJD	TAB

STATUS: ISSUED FOR BID
DATE: AUGUST 2021

SHEET NO.
G-1
1 OF 50

TOL-7215\0261
8/12/2021 2:35 PM
8/12/2021 2:35 PM

Alignment: FORCE MAIN

Tangent Data

Description	PT Station	Northing	Easting
Start:	0+00.000	681495.599	1641321.852
End:	0+79.340	681517.117	1641245.486

Tangent Data

Parameter	Value	Parameter	Value
Length:	79.34	Course:	N 74° 15' 47.8687" W

Tangent Data

Description	PT Station	Northing	Easting
Start:	0+79.340	681517.117	1641245.486
End:	0+84.530	681514.452	1641241.032

Tangent Data

Parameter	Value	Parameter	Value
Length:	5.19	Course:	S 59° 06' 01.4002" W

Tangent Data

Description	PT Station	Northing	Easting
Start:	0+84.530	681514.452	1641241.032
End:	5+04.701	681616.809	1640833.519

Tangent Data

Parameter	Value	Parameter	Value
Length:	420.171	Course:	N 75° 54' 01.6361" W

Tangent Data

Description	PT Station	Northing	Easting
Start:	5+04.701	681616.809	1640833.519
End:	6+00.190	681656.227	1640746.546

Tangent Data

Parameter	Value	Parameter	Value
Length:	95.489	Course:	N 65° 37' 08.2656" W

Tangent Data

Description	PT Station	Northing	Easting
Start:	6+00.190	681656.227	1640746.546
End:	7+76.558	681830.431	1640774.089

Tangent Data

Parameter	Value	Parameter	Value
Length:	176.368	Course:	N 08° 59' 04.4534" E

Tangent Data

Description	PT Station	Northing	Easting
Start:	7+76.558	681830.431	1640774.089
End:	9+94.113	682041.276	1640827.706

Tangent Data

Parameter	Value	Parameter	Value
Length:	217.555	Course:	N 14° 16' 03.5079" E

Tangent Data

Description	PT Station	Northing	Easting
Start:	9+94.113	682041.276	1640827.706
End:	11+99.698	682244.544	1640858.482

Tangent Data

Parameter	Value	Parameter	Value
Length:	205.585	Course:	N 08° 36' 34.3294" E

Tangent Data

Description	PT Station	Northing	Easting
Start:	11+99.698	682244.544	1640858.482
End:	13+69.730	682413.882	1640873.829

Tangent Data

Parameter	Value	Parameter	Value
Length:	170.032	Course:	N 05° 10' 42.7235" E

Tangent Data

Description	PT Station	Northing	Easting
Start:	13+69.730	682413.882	1640873.829
End:	14+57.278	682501.375	1640870.731

Tangent Data

Parameter	Value	Parameter	Value
Length:	87.548	Course:	N 02° 01' 40.4871" W

Tangent Data

Description	PT Station	Northing	Easting
Start:	14+57.278	682501.375	1640870.731
End:	15+80.211	682612.644	1640922.998

Tangent Data

Parameter	Value	Parameter	Value
Length:	122.933	Course:	N 25° 09' 40.1415" E

Tangent Data

Description	PT Station	Northing	Easting
Start:	15+80.211	682612.644	1640922.998
End:	18+87.802	682919.017	1640950.341

Tangent Data

Parameter	Value	Parameter	Value
Length:	307.591	Course:	N 05° 06' 00.1638" E

Tangent Data

Description	PT Station	Northing	Easting
Start:	18+87.802	682919.017	1640950.341
End:	19+37.276	682968.296	1640954.731

Tangent Data

Parameter	Value	Parameter	Value
Length:	49.474	Course:	N 05° 05' 24.2353" E

Tangent Data

Description	PT Station	Northing	Easting
Start:	19+37.276	682968.296	1640954.731
End:	21+87.255	683216.549	1640984.053

Tangent Data

Parameter	Value	Parameter	Value
Length:	249.979	Course:	N 06° 44' 10.4276" E

Tangent Data

Description	PT Station	Northing	Easting
Start:	21+87.255	683216.549	1640984.053
End:	22+03.025	683232.199	1640985.996

Tangent Data

Parameter	Value	Parameter	Value
Length:	15.77	Course:	N 07° 04' 39.0590" E

Tangent Data

Description	PT Station	Northing	Easting
Start:	22+03.025	683232.199	1640985.996
End:	24+57.842	683418.435	1641159.916

Tangent Data

Parameter	Value	Parameter	Value
Length:	254.817	Course:	N 43° 02' 29.1637" E

Tangent Data

Description	PT Station	Northing	Easting
Start:	24+57.842	683418.435	1641159.916
End:	24+59.169	683419.755	1641159.778

Tangent Data

Parameter	Value	Parameter	Value
Length:	1.327	Course:	N 05° 57' 42.9961" W

Tangent Data

Description	PT Station	Northing	Easting
Start:	24+59.169	683419.755	1641159.778
End:	30+97.034	683785.154	1640636.944

Tangent Data

Parameter	Value	Parameter	Value
Length:	637.865	Course:	N 55° 03' 03.5434" W

Tangent Data

Description	PT Station	Northing	Easting
Start:	30+97.034	683785.154	1640636.944
End:	32+08.927	683870.344	1640564.4

Tangent Data

Parameter	Value	Parameter	Value
Length:	111.893	Course:	N 40° 24' 59.1217" W

Tangent Data

Description	PT Station	Northing	Easting
Start:	32+08.927	683870.344	1640564.4
End:	32+10.390	683871.806	1640564.465

Tangent Data

Parameter	Value	Parameter	Value
Length:	1.464	Course:	N 02° 33' 00.6826" E

Tangent Data

Description	PT Station	Northing	Easting
Start:	32+10.390	683871.806	1640564.465
End:	33+92.940	683999.719	1640694.707

Tangent Data

Parameter	Value	Parameter	Value
Length:	182.55	Course:	N 45° 31' 00.4869" E

Tangent Data

Description	PT Station	Northing	Easting
Start:	33+92.940	683999.719	1640694.707
End:	33+94.382	684001.16	1640694.748

Tangent Data

Parameter	Value	Parameter	Value
Length:	1.442	Course:	N 01° 38' 41.8837" E

Tangent Data

Description	PT Station	Northing	Easting
Start:	33+94.382	684001.16	1640694.748
End:	34+04.601	684008.727	1640687.88

Tangent Data

Parameter	Value	Parameter	Value
Length:	10.218	Course:	N 42° 13' 36.7195" W

Tangent Data

Description	PT Station	Northing	Easting
Start:	34+04.601	684008.727	1640687.88
End:	36+14.030	684098.139	1640498.497

Tangent Data

Parameter	Value	Parameter	Value
Length:	209.429	Course:	N 64° 43' 36.7195" W

Tangent Data

Description	PT Station	Northing	Easting
Start:	36+14.030	684098.139	1640498.497
End:	36+50.771	684109.814	1640463.66

Tangent Data

Parameter	Value	Parameter	Value
Length:	36.741	Course:	N 71° 28' 20.4285" W

Tangent Data

Description	PT Station	Northing	Easting
Start:	36+50.771	684109.814	1640463.66
End:	37+51.251	684140.088	1640367.85

Tangent Data

Parameter	Value	Parameter	Value
Length:	100.479	Course:	N 72° 27' 52.3063" W

Tangent Data

Description	PT Station	Northing	Easting
Start:	37+51.251	684140.088	1640367.85
End:	39+07.884	684205.922	1640225.724

Tangent Data

Parameter	Value	Parameter	Value
Length:	156.633	Course:	N 65° 08' 45.6623" W

Tangent Data

Description	PT Station	Northing	Easting
Start:	39+07.884	684205.922	1640225.724
End:	39+90.335	684229.687	1640146.772

Tangent Data

Parameter	Value	Parameter	Value
Length:	82.451	Course:	N 73° 14' 52.2676" W

Tangent Data

Description	PT Station	Northing	Easting
Start:	39+90.335	684229.687	1640146.772
End:	44+82.846	684722.12	1640155.539

Tangent Data

Parameter	Value	Parameter	Value
Length:	492.511	Course:	N 01° 01' 11.6043" E

Tangent Data

Description	PT Station	Northing	Easting
Start:	44+82.846	684722.12	1640155.539
End:	44+85.172	684723.794	1640153.923

Tangent Data

Parameter	Value	Parameter	Value
Length:	2.326	Course:	N 43° 58' 48.3957" W

Tangent Data

Description	PT Station	Northing	Easting
Start:	44+85.172	684723.794	1640153.923
End:	45+17.410	684735.914	1640124.05

Tangent Data

Parameter	Value	Parameter	Value
Length:	32.238	Course:	N 67° 54' 58.5546" W

Alignment: WILLOW BEND ACCESS ROAD

Tangent Data

Description	PT Station	Northing	Easting
Start:	0+00.000	679370.092	1640139.9
End:	0+76.593	679410.855	1640075.055

Tangent Data

Parameter	Value	Parameter	Value
Length:	76.593	Course:	N 57° 50' 45.0633" W

Curve Point Data

Description	Station	Northing	Easting
PC:	0+76.593	679410.855	1640075.055
RP:		679368.524	1640048.445
PCC:	1+03.105	679418.5	1640049.993

Circular Curve Data

Parameter	Value	Parameter	Value
Delta:	30° 22' 48.3987"	Type:	LEFT
Radius:	50		
Length:	26.512	Tangent:	13.575
Mid-Ord:	1.747	External:	1.81
Chord:	26.202	Course:	N 73° 02' 09.2626" W

Curve Point Data

Description	Station	Northing	Easting
PCC:	1+03.105	679418.5	1640049.993
RP:		679508.456	1640052.779
PT:	1+78.826	679450.581	1639983.855

Circular Curve Data

Parameter	Value	Parameter	Value
Delta:	48° 12' 20.4802"	Type:	RIGHT
Radius:	90		
Length:	75.721	Tangent:	40.264
Mid-Ord:	7.847	External:	8.596
Chord:	73.508	Course:	N 64° 07' 23.2219" W

Tangent Data

Description	PT Station	Northing	Easting
Start:	1+78.826	679450.581	1639983.855
End:	1+92.678	679461.189	1639974.948

Tangent Data

Parameter	Value	Parameter	Value
Length:	13.851	Course:	N 40° 01' 12.9818" W

Curve Point Data

Description	Station	Northing	Easting
PC:	1+92.678	679461.189	1639974.948
RP:		679557.648	1640089.821
PT:	3+02.044	679562.241	1639939.891

Circular Curve Data

Parameter	Value	Parameter	Value
Delta:	41° 46' 29.8969"	Type:	RIGHT
Radius:	150		
Length:	109.367	Tangent:	57.242
Mid-Ord:	9.858	External:	10.551
Chord:	106.96	Course:	N 19° 07' 58.0333" W

Tangent Data

Description	PT Station	Northing	Easting
Start:	3+02.044	679562.241	1639939.891
End:	4+08.348	679668.495	1639943.146

Tangent Data

Parameter	Value	Parameter	Value
Length:	106.304	Course:	N 01° 45' 16.9151" E

Curve Point Data

Description	Station	Northing	Easting
PC:	4+08.348	679668.495	1639943.146
RP:		679676.15	1639693.264
PT:	4+84.438	679743.732	1639933.956

Circular Curve Data

Parameter	Value	Parameter	Value
Delta:	17° 26' 18.4443"	Type:	LEFT
Radius:	250		
Length:	76.09	Tangent:	38.341
Mid-Ord:	2.889	External:	2.923
Chord:	75.796	Course:	N 06° 57' 52.3070" W

Tangent Data

Description	PT Station	Northing	Easting
Start:	4+84.438	679743.732	1639933.956
End:	5+62.496	679818.884	1639912.854

Tangent Data

Parameter	Value	Parameter	Value
Length:	78.058	Course:	N 15° 41' 01.5292" W

Curve Point Data

Description	Station	Northing	Easting
PC:	5+62.496	679818.884	1639912.854
RP:		679825.642	1639936.924
PT:	5+86.538	679841.516	1639917.61

Circular Curve Data

Parameter	Value	Parameter	Value
Delta:	55° 05' 59.7047"	Type:	RIGHT
Radius:	25		
Length:	24.042	Tangent:	13.042
Mid-Ord:	2.835	External:	3.197
Chord:	23.126	Course:	N 11° 51' 58.3232" E

Tangent Data

Description	PT Station	Northing	Easting
Start:	5+86.538	679841.516	1639917.61
End:	6+15.664	679864.017	1639936.103

Tangent Data

Parameter	Value	Parameter	Value
Length:	29.126	Course:	N 39° 24' 58.1755" E

Curve Point Data

Description	Station	Northing	Easting
PC:	6+15.664	679864.017	1639936.103
RP:		679879.891	1639916.789
PT:	6+32.336	679879.364	1639941.784

Circular Curve Data

Parameter	Value	Parameter	Value
Delta:	38° 12' 28.7611"	Type:	LEFT
Radius:	25		
Length:	16.671	Tangent:	8.659
Mid-Ord:	1.377	External:	1.457
Chord:	16.364	Course:	N 20° 18' 43.7950" E

Tangent Data

Description	PT Station	Northing	Easting
Start:	6+32.336	679879.364	1639941.784
End:	6+67.294	679914.314	1639942.521

Tangent Data

Parameter	Value	Parameter	Value
Length:	34.958	Course:	N 01° 12' 29.4144" E

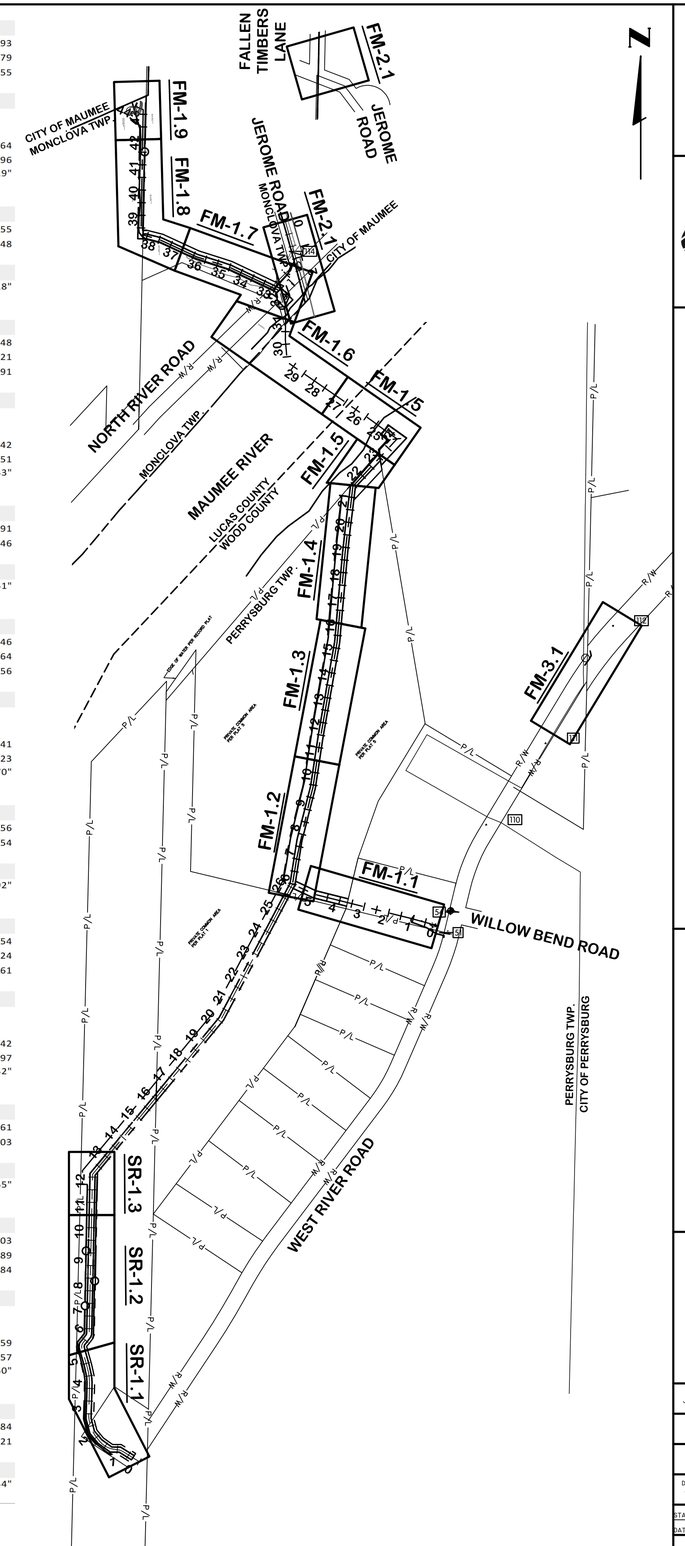

VERTICAL DATUM:
Vertical Datum is based on '88 NAVD.

NORTHWESTERN THE DISTRICT WATER & SEWER

LAYOUT SHEET

NORTHWESTERN WATER AND SEWER DISTRICT,
WILLOWBEND PUMP STATION IMPROVEMENTS, SS-307

NO.	DATE	REVISIONS AFTER ISSUED FOR BID	BY
5			
4			
3			
2			
1			

Jones & Henry Engineers, Ltd.
Fluid thinking©.
www.JHeng.com

JOB NO. 796-7215.002

SCALE 1"=300'

THIS LINE SCALES 1" WHEN PLOTTED TO NOTED SCALE

DESIGNED	DRAWN	CHECKED
TAB	BJD	TAB

STATUS: ISSUED FOR BID

DATE: AUGUST 2021

SHEET NO.
G-2
2 OF 50

TOL-7215002\G2-LAYOUT SHEET
8/12/2021 2:39 PM - BDRILL
8/12/2021 2:39 PM

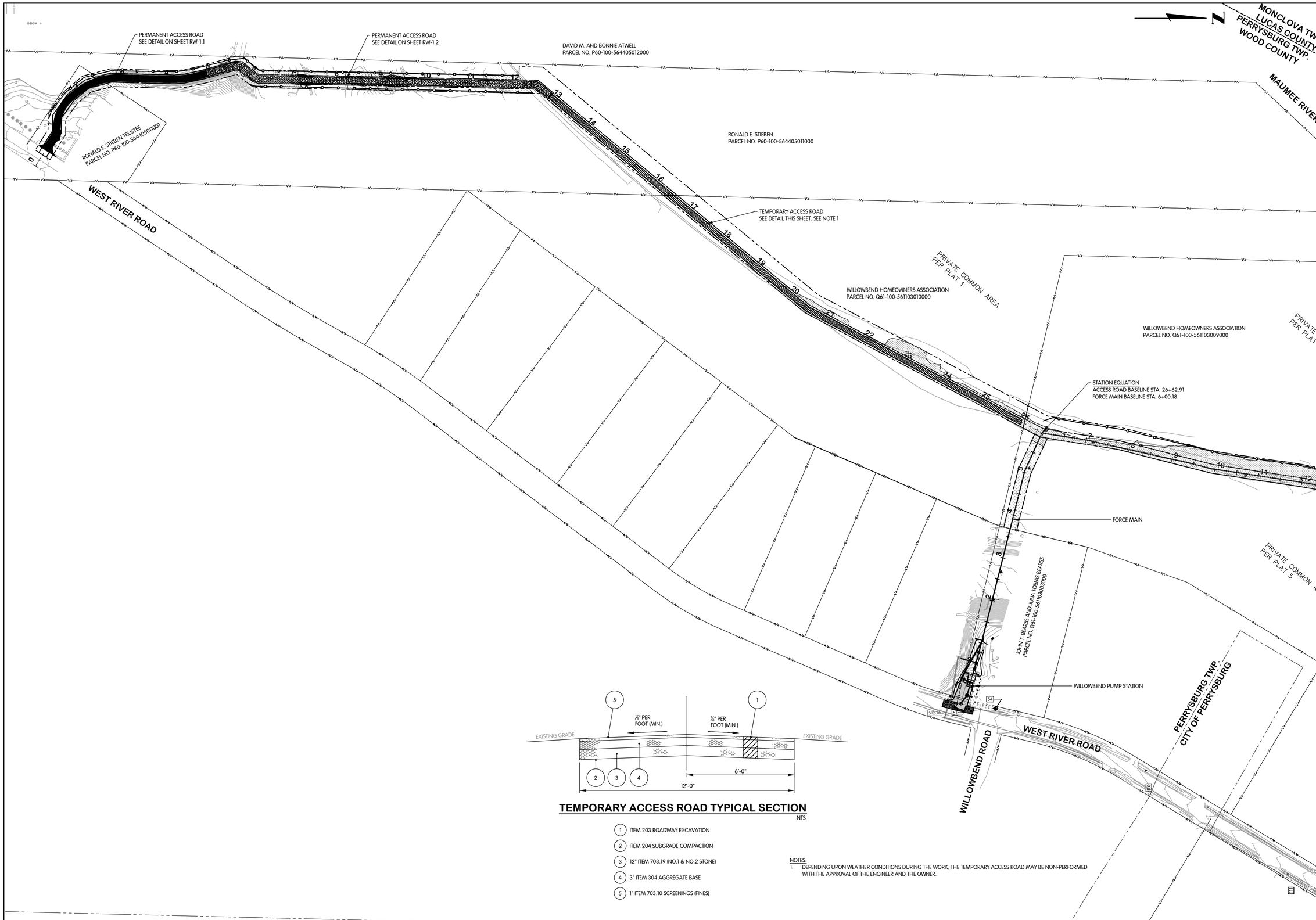

TEMPORARY ACCESS ROAD TYPICAL SECTION

NTS

1. ITEM 203 ROADWAY EXCAVATION
2. ITEM 204 SUBGRADE COMPACTION
3. 12" ITEM 703.19 (NO.1 & NO.2 STONE)
4. 3" ITEM 304 AGGREGATE BASE
5. 1" ITEM 703.10 SCREENINGS (FINES)

NOTES:

1. DEPENDING UPON WEATHER CONDITIONS DURING THE WORK, THE TEMPORARY ACCESS ROAD MAY BE NON-PERFORMED WITH THE APPROVAL OF THE ENGINEER AND THE OWNER.

NORTHWESTERN THE DISTRICT WATER & SEWER

CONSTRUCTION ACCESS PLAN

NORTHWESTERN WATER AND SEWER DISTRICT,
WILLOWBEND PUMP STATION IMPROVEMENTS, SS-307

NO.	DATE	REVISIONS AFTER ISSUED FOR BID	BY

Jones & Henry Engineers, Ltd.

Fluid thinking©.
www.JHeng.com

JOB NO. 796-7215.002

SCALE 1"=100'

THIS LINE SCALES 1" WHEN PLOTTED TO NOTED SCALE

DESIGNED	DRAWN	CHECKED
TAB	BJD	TAB

STATUS: ISSUED FOR BID

DATE: AUGUST 2021

SHEET NO.

G-3

3 OF 50

TOL-7215002G3-CONSTRUCTION ACCESS PLAN
8/12/2021 9:44 AM - BDRILL
8/12/2021 9:40 PM

ITEM No.	Plan Quantity	Contingency Quantity	Grand Total	Unit	Description	G-3	PS-2	FM1.1	FM1.2	FM1.3	FM1.4	FM1.5	FM1.6	FM1.7	FM1.8	FM1.9	FM2.1	FM3.1	RW1.1	RW1.2	RW1.3	CS1.1	CS1.2	CS1.3	CS1.4	CS1.5	CS1.6
1	1	0	1	LS	Mobilization and Demobilization	0	0	0	0	0	0	0	0	0	0	0	0	0	0	0	0	0	0	0	0	0	0
2	12	2	14	WK	Bypass Pumping	0	0	0	0	0	0	0	0	0	0	0	0	0	0	0	0	0	0	0	0	0	0
3	1	0	1	LS	Storm Water Pollution Prevention	0	0	0	0	0	0	0	0	0	0	0	0	0	0	0	0	0	0	0	0	0	0
4	1,525	100	1,625	LF	Trench Rock Excavation (6-inches to 5-feet in depth)	0	0	0	0	0	400	275	0	250	500	100	0	0	0	0	0	0	0	0	0	0	0
5a	1	0	1	LS	Willowbend Pump Station and Wet Well Demolition and Abandonment	0	0	0	0	0	0	0	0	0	0	0	0	0	0	0	0	0	0	0	0	0	0
5b	1	0	1	LS	Willowbend Pump Station Wet Well, Controls Building, Site Improvements, Appurtenances and Accessories	0	0	0	0	0	0	0	0	0	0	0	0	0	0	0	0	0	0	0	0	0	0
6a	36	0	36	LF	4-inch Drain, Type C	0	0	36	0	0	0	0	0	0	0	0	0	0	0	0	0	0	0	0	0	0	0
6b	70	0	70	LF	8-inch Culvert, Type B	0	0	0	0	0	0	0	0	0	0	0	0	0	0	0	70	0	0	0	0	0	0
6c	40	0	40	LF	12-inch Driveway Culvert, Type B	0	0	0	0	0	0	0	0	0	0	40	0	0	0	0	0	0	0	0	0	0	0
6d	10	0	10	LF	10-inch Sanitary Sewer, Type B	0	0	0	0	0	0	0	0	0	0	10	0	0	0	0	0	0	0	0	0	0	0
6e	45	0	45	LF	15-inch Sanitary Sewer, Type B	0	0	0	0	0	0	0	0	0	0	45	0	0	0	0	0	0	0	0	0	0	0
6f	35	0	35	LF	24-inch Culvert, Type B	0	0	0	0	0	0	0	0	0	0	0	0	0	0	35	0	0	0	0	0	0	0
6g	35	0	35	LF	30-inch Culvert, Type B	0	0	0	0	0	0	0	0	0	0	0	0	0	0	35	0	0	0	0	0	0	0
6h	45	0	45	LF	36-inch Culvert, Type B	0	0	0	0	0	0	0	0	0	0	0	0	0	0	45	0	0	0	0	0	0	0
6i	65	0	65	LF	12-inch Sewer Removed	0	0	0	0	0	0	0	0	0	0	65	0	0	0	0	0	0	0	0	0	0	0
7a	222	0	222	LF	8-inch Force Main, Type B	0	0	18	0	0	0	0	0	0	0	11	166	27	0	0	0	0	0	0	0	0	0
7b	5	0	5	LF	10-inch Force Main, Type B	0	0	0	0	0	0	0	0	0	0	0	0	5	0	0	0	0	0	0	0	0	0
7c	65	0	65	LF	12-inch Force Main, Type B	0	0	65	0	0	0	0	0	0	0	0	0	0	0	0	0	0	0	0	0	0	0
7d	1,895	5	1,900	LF	12-inch Force Main, Type C	0	0	0	502	550	550	273	0	20	0	0	0	0	0	0	0	0	0	0	0	0	0
7e	507	3	510	LF	12-inch Force Main, Trenchless	0	0	459	48	0	0	0	0	0	0	0	0	0	0	0	0	0	0	0	0	0	0
7f	26	4	30	LF	20-inch Force Main, Type B	0	0	0	0	0	0	0	0	26	0	0	0	0	0	0	0	0	0	0	0	0	0
7g	1,152	8	1,160	LF	20-inch Force Main, Type C	0	0	0	0	0	0	0	0	456	551	145	0	0	0	0	0	0	0	0	0	0	0
7h	7	0	7	EA	Connection to Exiting Force Main	0	0	1	0	0	0	0	0	1	0	0	1	4	0	0	0	0	0	0	0	0	0
7i	1	0	1	EA	Manhole 4327 Modifications	0	0	0	0	0	0	0	0	0	0	1	0	0	0	0	0	0	0	0	0	0	0
7j	2	0	2	EA	12-inch Connection to Existing Pipeline	0	0	0	0	0	0	1	0	1	0	0	0	0	0	0	0	0	0	0	0	0	0
7k	2	0	2	EA	Force Main Termination and Abandonment, All Sizes	0	0	0	0	0	0	0	0	1	0	0	1	0	0	0	0	0	0	0	0	0	0
7l	3	0	3	EA	Force Main Plugged	0	0	0	0	0	0	1	0	0	0	0	2	0	0	0	0	0	0	0	0	0	0
8a	8	0	8	VLF	Type I Sanitary Sewer Manhole	0	0	0	0	0	0	0	0	0	0	8	0	0	0	0	0	0	0	0	0	0	0
8b	15	0	15	VLF	Type II Sanitary Sewer Manhole	0	0	0	0	0	0	0	0	0	0	15	0	0	0	0	0	0	0	0	0	0	0
8c	1	0	1	LS	Flow Meter Manhole	0	0	1	0	0	0	0	0	0	0	0	0	0	0	0	0	0	0	0	0	0	0
8d	1	0	1	LS	Flow Meter / Bypass Manhole Conversion	0	0	1	0	0	0	0	0	0	0	0	0	0	0	0	0	0	0	0	0	0	0
9a	6	0	6	EA	8-inch Gate Valve and Box	0	0	1	0	0	0	0	0	1	0	0	1	3	0	0	0	0	0	0	0	0	0
9b	1	0	1	EA	8-inch Tapping Sleeve, Valve and Box	0	0	0	0	0	0	0	0	0	0	1	0	0	0	0	0	0	0	0	0	0	0
9c	2	0	2	EA	10-inch Gate Valve and Box	0	0	0	0	0	0	0	0	0	0	0	0	2	0	0	0	0	0	0	0	0	0
9d	1	0	1	EA	12-inch Gate Valve and Manhole	0	0	1	0	0	0	0	0	0	0	0	0	0	0	0	0	0	0	0	0	0	0
9e	1	0	1	EA	12-inch Gate Valve and Box	0	0	0	0	0	0	0	0	1	0	0	0	0	0	0	0	0	0	0	0	0	0
9f	2	0	2	EA	12-inch Air Release Valve and Manhole	0	0	1	0	1	0	0	0	0	0	0	0	0	0	0	0	0	0	0	0	0	0
9g	1	1	2	EA	20-inch Air Release Valve and Manhole	0	0	0	0	0	0	0	0	1	0	0	0	0	0	0	0	0	0	0	0	0	0
9h	1	0	1	EA	20-inch Plug Valve and Box	0	0	0	0	0	0	0	0	0	0	1	0	0	0	0	0	0	0	0	0	0	0
10a	302	28	330	SY	ODOT Item 202 Pavement and Base Removed	0	233	0	0	0	0	0	0	27	0	0	42	0	0	0	0	0	0	0	0	0	0
10b	94	16	110	SY	ODOT Item 254 Pavement Planing	0	94	0	0	0	0	0	0	0	0	0	0	0	0	0	0	0	0	0	0	0	0
11a	207	23	230	CY	ODOT Item 203 Excavation	0	0	0	0	0	0	0	0	0	0	0	0	0	0	0	0	8	1	12	86	67	33
11b	290	20	310	CY	ODOT Item 203 Embankment	0	0	0	0	0	0	0	0	0	0	0	0	0	0	0	0	10	59	78	97	39	7
11c	800	0	800	SY	Access Roadway Repairs	800	0	0	0	0	0	0	0	0	0	0	0	0	0	0	0	0	0	0	0	0	0
11d	1,333	7	1,340	SY	Access Roadway	1333	0	0	0	0	0	0	0	0	0	0	0	0	0	0	0	0	0	0	0	0	0
11e	1,733	7	1,740	SY	Temporary Access Roadway	1733	0	0	0	0	0	0	0	0	0	0	0	0	0	0	0	0	0	0	0	0	0
11f	302	28	330	SY	Asphalt Roadway Repairs - Full Depth	0	233	0	0	0	0	0	0	27	0	0	42	0	0	0	0	0	0	0	0	0	0
11g	94	16	110	SY	Asphalt Roadway Repairs - Resurfacing	0	94	0	0	0	0	0	0	0	0	0	0	0	0	0	0	0	0	0	0	0	0
11h	1,333	7	1,340	SY	Subgrade Support Material	1333	0	0	0	0	0	0	0	0	0	0	0	0	0	0	0	0	0	0	0	0	0
11i	0	100	100	CY	ODOT Item 304 - Backfill for Unsuitable Materials Removed	0	0	0	0	0	0	0	0	0	0	0	0	0	0	0	0	0	0	0	0	0	0
12	1	0	1	LS	Video Recording of the Zone of Influence	0	0	0	0	0	0	0	0	0	0	0	0	0	0	0	0	0	0	0	0	0	0
13	1	0	1	LS	Maintenance of Traffic	0	0	0	0	0	0	0	0	0	0	0	0	0	0	0	0	0	0	0	0	0	0
14	1	0	1	LS	Tree Removal, Clearing and Grubbing	0	0	0	0	0	0	0	0	0	0	0	0	0	0	0	0	0	0	0	0	0	0
15	103	7	110	LF	Sheet Piling Retaining Wall	0	0	0	0	0	0	0	0	0	0	103	0	0	0	0	0	0	0	0	0	0	0
16	90	10	100	CY	Dump Rock Fill, Type D	0	0	0	0	0	0	0	0	0	0	0	0	0	0	90	0	0	0	0	0	0	0
ALLOW	1	0	1	LS	Telemetry Equipment and Programming (updated 7/29/21 with rev1 quote)	0	0	0	0	0	0	0	0	0	0	0	0	0	0	0	0	0	0	0	0	0	0

NOTES:
1. QUANTITIES SHOWN IN THE GENERAL SUMMARY ARE REFERENCED TO THE SEWER LINE PLAN AND PROFILE SHEET.
2. BIDDERS/CONTRACTORS SHALL CALL DISCREPANCIES TO THE ENGINEERS ATTENTION AS SOON AS THEY ARE DISCOVERED.
3. BIDDER ACKNOWLEDGES THAT QUANTITIES ARE NOT GUARANTEED AND THE FINAL PAYMENT WILL BE BASED ON ACTUAL QUANTITIES DETERMINED AS PROVIDED IN THE CONTRACT DOCUMENTS.

NORTHWESTERN THE DISTRICT WATER & SEWER

GENERAL SUMMARY

NORTHWESTERN WATER AND SEWER DISTRICT,
WILLOWBEND PUMP STATION IMPROVEMENTS, SS-307

NO.	DATE	REVISIONS AFTER ISSUED FOR BID	BY
5			
4			
3			
2			
1			

Jones & Henry Engineers, Ltd.

Fluid thinking©.
www.JHeng.com

JOB NO. 796-7215.002

SCALE NONE

THIS LINE SCALES 1" WHEN PLOTTED TO NOTED SCALE

DESIGNED	DRAWN	CHECKED
TAB	BJD	TAB

STATUS: ISSUED FOR BID
DATE: AUGUST 2021

SHEET NO.
G-4
4 OF 50

T:\0L-7215\002\L-GENERAL SUMMARY
8/17/2021 10:04 AM - BDRILL
8/12/2021 2:40 PM
XREFERENCED FILES:

EXISTING STRUCTURE DATA		
NAME	TYPE	DATA
5017 *	SANITARY MANHOLE	CASTING EL. 623.28 10" N INV. EL. 615.88 10" S INV. EL. 615.48 12" W INV. EL. 615.78
5034	SANITARY MANHOLE	CASTING EL. 626.29 8" N INV. EL. 617.50 8" E INV. EL. 616.30 10" S INV. EL. 616.10
5076	SANITARY MANHOLE	CASTING EL. 623.40 8" NW INV. EL. 615.17 8" NE INV. EL. 615.17
5123	CATCH BASIN	CASTING EL. 621.09 18" E INV. EL. 613.14 18" W INV. EL. 604.34
5123A	CATCH BASIN	CASTING EL. 622.36 12" S INV. EL. 616.21 18" N INV. EL. 616.21 18" W INV. EL. 616.21
20359	SANITARY MANHOLE	CASTING EL. 638.86 8" NE INV. EL. 633.49 8" SW INV. EL. 633.49
20500	SANITARY MANHOLE	CASTING EL. 637.09 8" NE INV. EL. 621.49 8" SE INV. EL. 621.49 10" SW INV. EL. 621.49
20500A	SANITARY MANHOLE	CASTING EL. 637.26 8" NW INV. EL. 621.78

* REMOVE AND REPLACE WITH MH-1

BENCHMARKS				
POINT #	RAW DESCRIPTION	NORTHING	EASTING	ELEVATION
54	SET BENCH TIE SPIKE IN LIGHT AND POWER POLE	681,551.34	1,641,372.38	626.37

CONTROL POINTS				
POINT #	RAW DESCRIPTION	ELEVATION	NORTHING	EASTING
51	SET MAG NAIL	623.32	681,464.01	1,641,360.60
110	SET CAPPED IRON REBAR	629.20	681,892.34	1,641,513.42
111	SET CAPPED IRON REBAR	635.55	682,215.28	1,641,748.35
112	SET CAPPED IRON REBAR	637.39	682,680.23	1,642,015.54
114	SET CAPPED IRON REBAR	596.77	684,146.13	1,640,787.77

MANHOLE SCHEDULE					
NO.	NORTHING	EASTING	TYPE	CASTING EL.	PIPE DATA
1	681,471.75	1,641,361.76	TYPE I 4' DIA.	623.28	15" NW INV. EL. 615.36 10" N INV. EL. 615.88 10" S INV. EL. 615.48
2	681,485.79	1,641,342.86	TYPE II 5' DIA.	622.83	15" SE INV. EL. 615.17 15" W INV. EL. 615.17 ** 8" N INV. EL. 615.17

* * INVERT OF STRUCTURE 608.00 (SEE NOTE ON SHEET PS-3)
(SEE DETAIL ON SHEET PE-4)

SWPPP MEASURES
SEE SHEET PS-2 FOR REQUIRED SWPPP

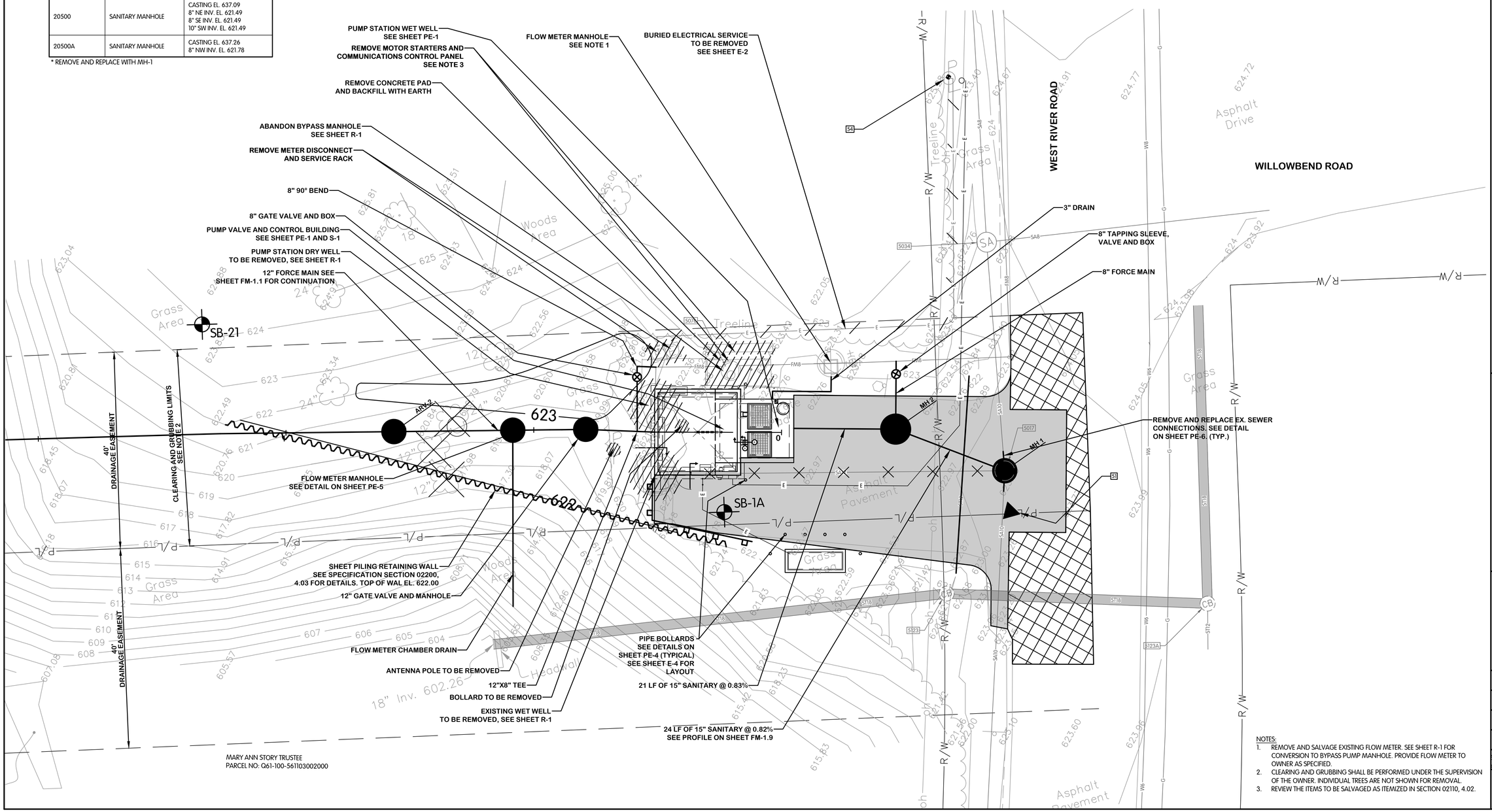

NOTES:
1. REMOVE AND SALVAGE EXISTING FLOW METER. SEE SHEET R-1 FOR CONVERSION TO BYPASS PUMP MANHOLE. PROVIDE FLOW METER TO OWNER AS SPECIFIED.
2. CLEARING AND GRUBBING SHALL BE PERFORMED UNDER THE SUPERVISION OF THE OWNER. INDIVIDUAL TREES ARE NOT SHOWN FOR REMOVAL.
3. REVIEW THE ITEMS TO BE SALVAGED AS ITEMIZED IN SECTION 02110, 4.02.

NORTHWESTERN THE DISTRICT WATER & SEWER

PUMP STATION SITE PLAN

NORTHWESTERN WATER AND SEWER DISTRICT,
WILLOWBEND PUMP STATION IMPROVEMENTS, SS-307

NO.	DATE	REVISIONS AFTER ISSUED FOR BID	BY

Jones & Henry Engineers, Ltd.
Fluid thinking©.
www.JHeng.com

JOB NO.	796-7215.002
SCALE	1"=10'
THIS LINE SCALES 1" WHEN PLOTTED TO NOTED SCALE	
DESIGNED	TAB
DRAWN	BJD
CHECKED	TAB
STATUS:	ISSUED FOR BID
DATE:	AUGUST 2021
SHEET NO.	PS-1
	5 OF 50

TQL-7215002PS1-PUMP STATION SITE PLAN
8/12/2021 10:27 AM - BJDRILL
8/12/2021 2:41 PM

EXISTING STRUCTURE DATA		
NAME	TYPE	DATA
5017	SANITARY MANHOLE	CASTING EL. 623.28 10" N INV. EL. 615.88 10" S INV. EL. 615.48 12" W INV. EL. 615.78
5034	SANITARY MANHOLE	CASTING EL. 626.29 8" N INV. EL. 617.50 8" E INV. EL. 616.30 10" S INV. EL. 616.10
5076	SANITARY MANHOLE	CASTING EL. 623.40 8" NW INV. EL. 615.17 8" NE INV. EL. 615.17
5123	CATCH BASIN	CASTING EL. 621.09 18" E INV. EL. 613.14 18" W INV. EL. 604.34
5123A	CATCH BASIN	CASTING EL. 622.36 12" S INV. EL. 616.21 18" N INV. EL. 616.21 18" W INV. EL. 616.21
20359	SANITARY MANHOLE	CASTING EL. 638.86 8" NE INV. EL. 633.49 8" SW INV. EL. 633.49
20500	SANITARY MANHOLE	CASTING EL. 637.09 8" NE INV. EL. 621.49 8" SE INV. EL. 621.49 10" SW INV. EL. 621.49
20500A	SANITARY MANHOLE	CASTING EL. 637.26 8" NW INV. EL. 621.78

BENCHMARKS				
POINT #	RAW DESCRIPTION	NORTHING	EASTING	ELEVATION
54	SET BENCH TIE SPIKE IN LIGHT AND POWER POLE	681,551.34	1,641,372.38	626.37

CONTROL POINTS				
POINT #	RAW DESCRIPTION	ELEVATION	NORTHING	EASTING
51	SET MAG NAIL	623.32	681,464.01	1,641,360.60
110	SET CAPPED IRON REBAR	629.20	681,892.34	1,641,513.42
111	SET CAPPED IRON REBAR	635.55	682,215.28	1,641,748.35
112	SET CAPPED IRON REBAR	637.39	682,680.23	1,642,015.54
114	SET CAPPED IRON REBAR	596.77	684,146.13	1,640,787.77

MANHOLE SCHEDULE					
NO.	NORTHING	EASTING	TYPE	CASTING EL.	PIPE DATA
1	681,471.75	1,641,361.76	TYPE I 4' DIA.	623.28	15" NW INV. EL. 615.36 10" N INV. EL. 615.88 10" S INV. EL. 615.48
2	681,485.79	1,641,342.86	TYPE II 5' DIA.	622.83	15" SE INV. EL. 615.17 15" W INV. EL. 615.17 8" N INV. EL. 615.17

* * INVERT OF STRUCTURE 608.00 (SEE NOTE ON SHEET PS-3)

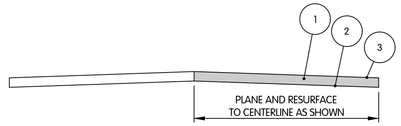

PAVEMENT PLANING TYPICAL SECTION

NTS

1. 1½" ODOT ITEM 254 PAVEMENT PLANING
2. 0.09 GAL/SY ODOT ITEM 407 TACK COAT
3. 1½" ODOT ITEM 441 SURFACE COURSE TYPE 1 P6-64-22 (448)

NOTES:
1. AREAS MARKED FOR PAVEMENT PLANING ARE INTENDED TO BE RESURFACED TO MATCH EXISTING GRADES.

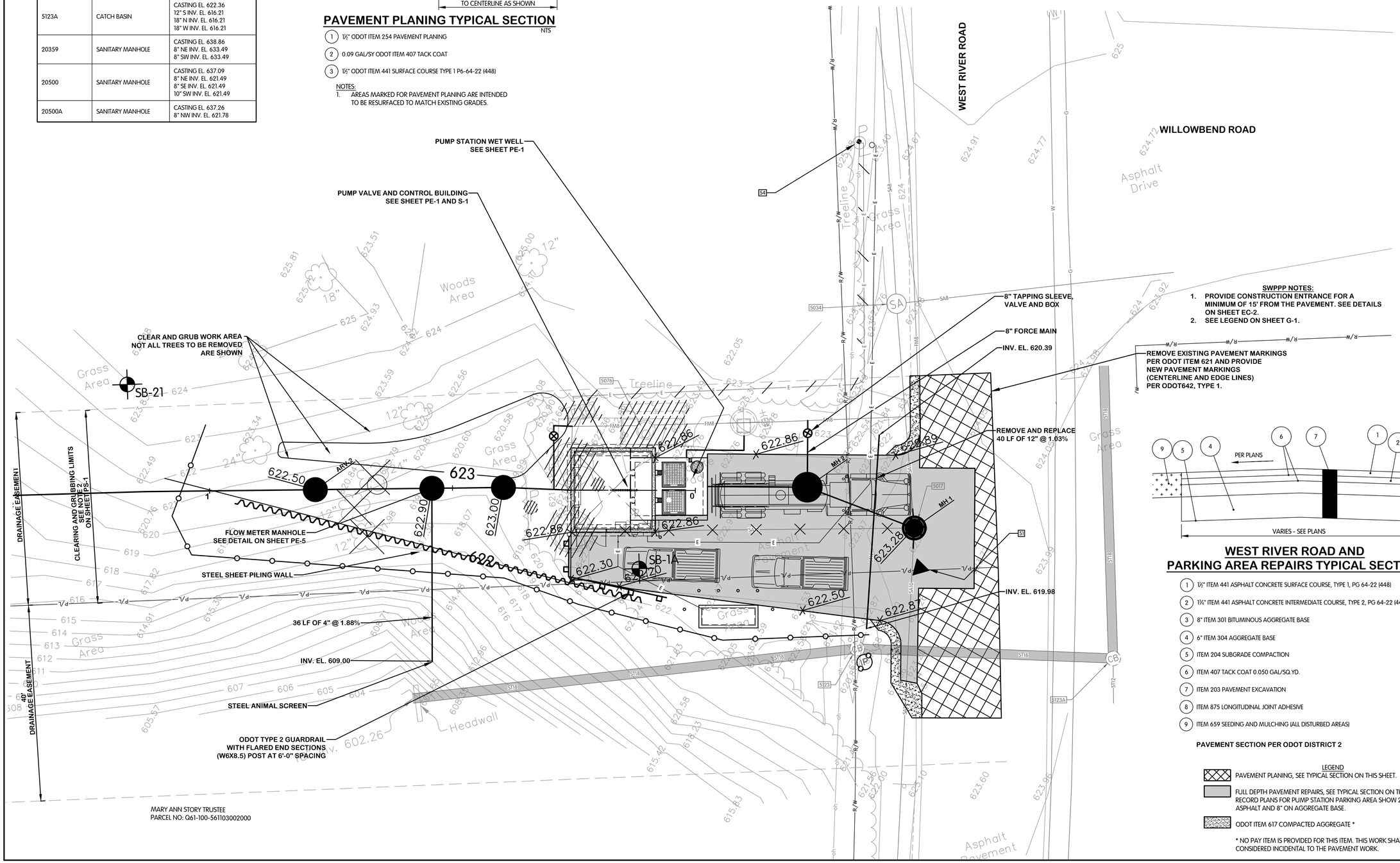

SWPPP NOTES:

1. PROVIDE CONSTRUCTION ENTRANCE FOR A MINIMUM OF 15' FROM THE PAVEMENT. SEE DETAILS ON SHEET EC-2.
2. SEE LEGEND ON SHEET G-1.

REMOVE EXISTING PAVEMENT MARKINGS PER ODOT ITEM 621 AND PROVIDE NEW PAVEMENT MARKINGS (CENTERLINE AND EDGE LINES) PER ODOT642, TYPE 1.

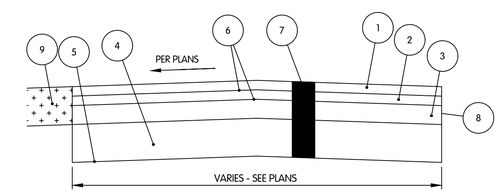

WEST RIVER ROAD AND PARKING AREA REPAIRS TYPICAL SECTION

NTS

1. 1½" ITEM 441 ASPHALT CONCRETE SURFACE COURSE, TYPE 1, PG 64-22 (448)
2. 1¾" ITEM 441 ASPHALT CONCRETE INTERMEDIATE COURSE, TYPE 2, PG 64-22 (448)
3. 8" ITEM 301 BITUMINOUS AGGREGATE BASE
4. 6" ITEM 304 AGGREGATE BASE
5. ITEM 204 SUBGRADE COMPACTION
6. ITEM 407 TACK COAT 0.050 GAL/SQ.YD.
7. ITEM 203 PAVEMENT EXCAVATION
8. ITEM 875 LONGITUDINAL JOINT ADHESIVE
9. ITEM 659 SEEDING AND MULCHING (ALL DISTURBED AREAS)

PAVEMENT SECTION PER ODOT DISTRICT 2

LEGEND

- PAVEMENT PLANING, SEE TYPICAL SECTION ON THIS SHEET.
- FULL DEPTH PAVEMENT REPAIRS, SEE TYPICAL SECTION ON THIS SHEET. RECORD PLANS FOR PUMP STATION PARKING AREA SHOW 2" OF ASPHALT AND 8" ON AGGREGATE BASE.
- ODOT ITEM 617 COMPACTED AGGREGATE *

* NO PAY ITEM IS PROVIDED FOR THIS ITEM. THIS WORK SHALL BE CONSIDERED INCIDENTAL TO THE PAVEMENT WORK.

NORTHWESTERN THE DISTRICT WATER & SEWER

PUMP STATION
SITE GRADING PLAN

NORTHWESTERN WATER AND SEWER DISTRICT,
WILLOWBEND PUMP STATION IMPROVEMENTS, SS-307

NO.	DATE	REVISIONS AFTER ISSUED FOR BID	BY
3			
2			
1			

Jones & Henry Engineers, Ltd.
Fluid thinking®.
www.JHeng.com

JOB NO.	796-7215.002
SCALE	1"=10'
THIS LINE SCALES 1" WHEN PLOTTED TO NOTED SCALE	
DESIGNED	TAB
DRAWN	BJD
CHECKED	TAB
STATUS:	ISSUED FOR BID
DATE:	AUGUST 2021
SHEET NO.	PS-2
	6 OF 50

TOL-7215002PS2-SITE GRADING PLAN
8/26/2021 7:59 AM - BDRILL
8/26/2021 8:01 AM

EXISTING STRUCTURE DATA		
NAME	TYPE	DATA
5017	SANITARY MANHOLE	CASTING EL. 623.28 10" N INV. EL. 615.88 10" S INV. EL. 615.48 12" W INV. EL. 615.78
5034	SANITARY MANHOLE	CASTING EL. 626.29 8" N INV. EL. 617.50 8" E INV. EL. 616.30 10" S INV. EL. 616.10
5076	SANITARY MANHOLE	CASTING EL. 623.40 8" NW INV. EL. 615.17 8" NE INV. EL. 615.17
5123	CATCH BASIN	CASTING EL. 621.09 18" E INV. EL. 613.14 18" W INV. EL. 604.34
5123A	CATCH BASIN	CASTING EL. 622.36 12" S INV. EL. 616.21 18" N INV. EL. 616.21 18" W INV. EL. 616.21
20359	SANITARY MANHOLE	CASTING EL. 638.86 8" NE INV. EL. 633.49 8" SW INV. EL. 633.49
20500	SANITARY MANHOLE	CASTING EL. 637.09 8" NE INV. EL. 621.49 8" SE INV. EL. 621.49 10" SW INV. EL. 621.49
20500A	SANITARY MANHOLE	CASTING EL. 637.26 8" NW INV. EL. 621.78

BENCHMARKS				
POINT #	RAW DESCRIPTION	NORTHING	EASTING	ELEVATION
54	SET BENCH TIE SPIKE IN LIGHT AND POWER POLE	681,551.34	1,641,372.38	626.37

CONTROL POINTS				
POINT #	RAW DESCRIPTION	ELEVATION	NORTHING	EASTING
51	SET MAG NAIL	623.32	681,464.01	1,641,360.60
110	SET CAPPED IRON REBAR	629.20	681,892.34	1,641,513.42
111	SET CAPPED IRON REBAR	635.55	682,215.28	1,641,748.35
112	SET CAPPED IRON REBAR	637.39	682,680.23	1,642,015.54
114	SET CAPPED IRON REBAR	596.77	684,146.13	1,640,787.77

MANHOLE SCHEDULE					
NO.	NORTHING	EASTING	TYPE	CASTING EL.	PIPE DATA
1	681,471.75	1,641,361.76	TYPE I 4' DIA.	623.28	15" NW INV. EL. 615.36 10" N INV. EL. 615.88 10" S INV. EL. 615.48
2	681,485.79	1,641,342.86	TYPE II 5' DIA.	622.83	15" SE INV. EL. 615.17 15" W INV. EL. 615.17 8" N INV. EL. 615.17

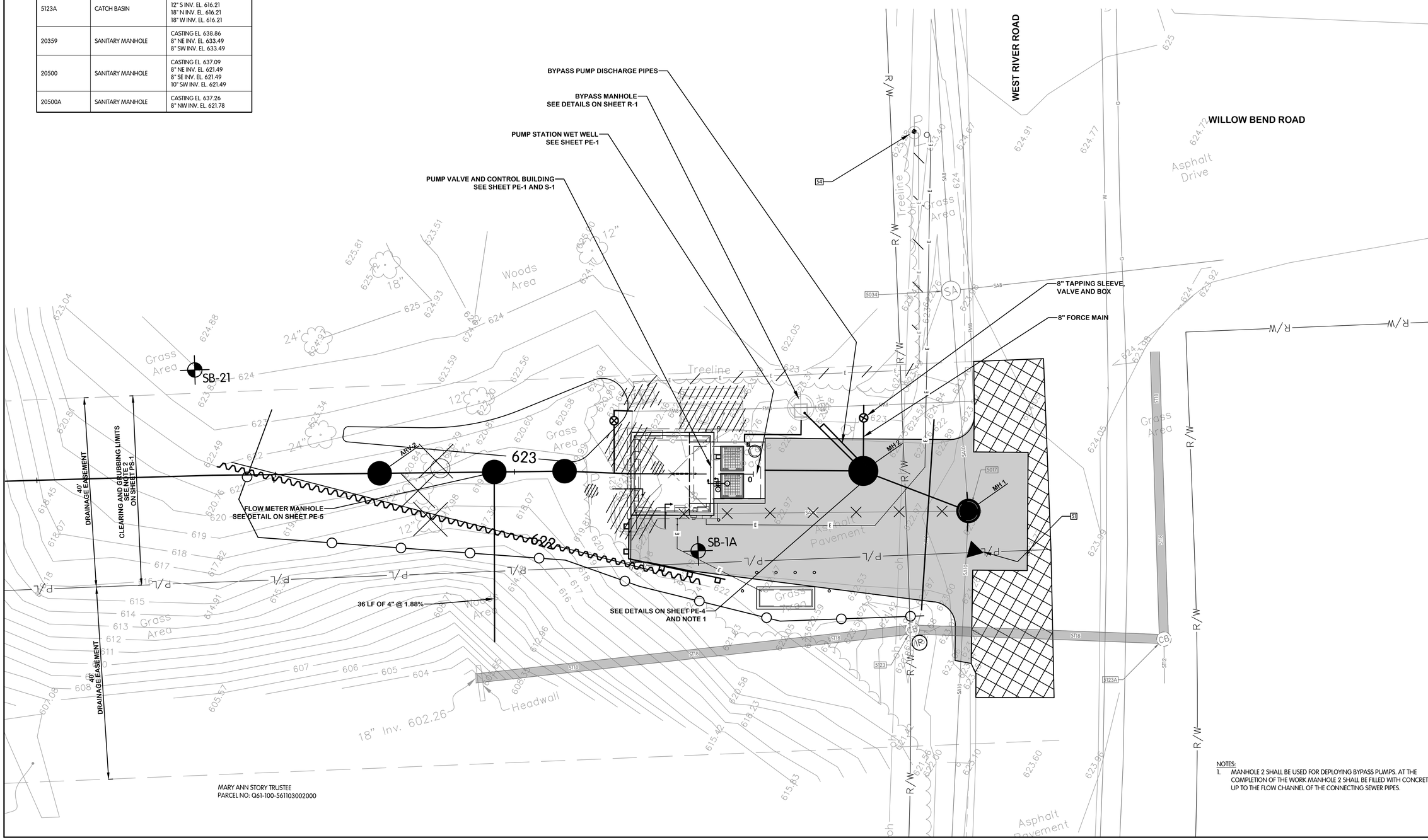

NOTES:
1. MANHOLE 2 SHALL BE USED FOR DEPLOYING BYPASS PUMPS. AT THE COMPLETION OF THE WORK MANHOLE 2 SHALL BE FILLED WITH CONCRETE UP TO THE FLOW CHANNEL OF THE CONNECTING SEWER PIPES.

NORTHWESTERN THE DISTRICT WATER & SEWER

PUMP STATION BYPASS PUMPING PLAN AND DETAILS

NORTHWESTERN WATER AND SEWER DISTRICT, WILLOWBEND PUMP STATION IMPROVEMENTS, SS-307

NO.	DATE	REVISIONS AFTER ISSUED FOR BID	BY
5			
4			
3			
2			
1			

Jones & Henry Engineers, Ltd.
Fluid thinking©.
www.JHeng.com

JOB NO. 796-7215.002
SCALE 1"=10'
THIS LINE SCALES 1" WHEN PLOTTED TO NOTED SCALE

DESIGNED	DRAWN	CHECKED
TAB	BJD	TAB

STATUS: ISSUED FOR BID
DATE: AUGUST 2021
SHEET NO.
PS-3
7 OF 50

TOL-7215002PS3-BYPASS PUMPING PLAN
BY:BRIAN JOSEPH DILL
8/12/2021 2:43 PM

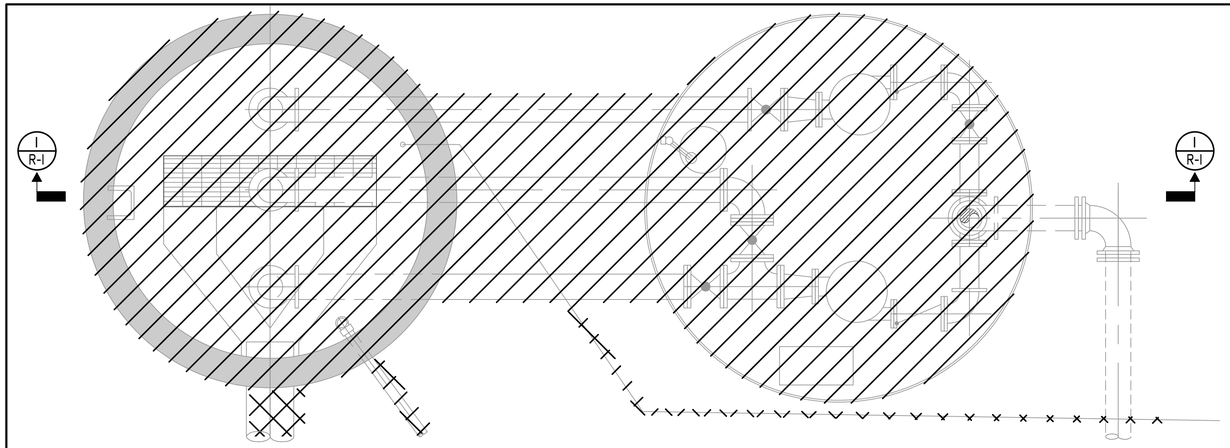

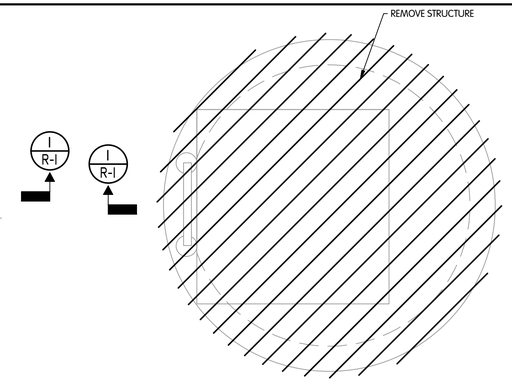

INTAKE WET WELL TOP EL. 624.67±

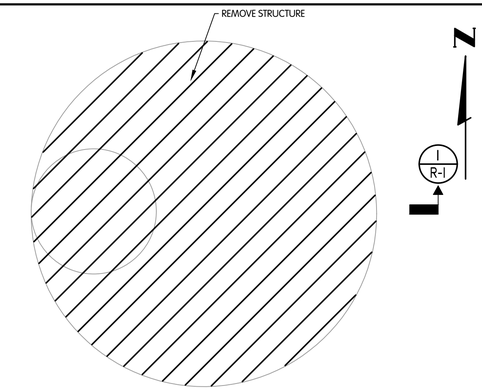

PUMP STATION T/LID EL. 623.00

NOTES:
1. REVIEW THE ITEMS TO BE SALVAGED IN SECTION 01043, 4.02.

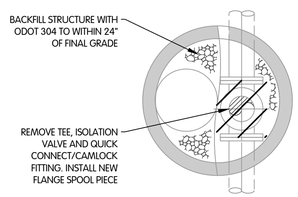

DEMOLITION PLAN

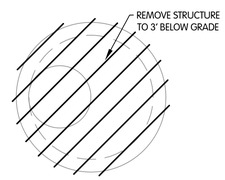

BYPASS MANHOLE ABANDONMENT DETAILS

TOP PLAN

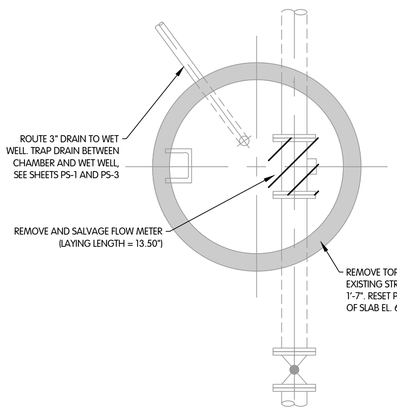

DEMOLITION PLAN

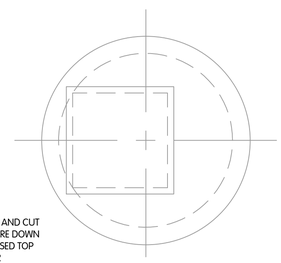

TOP PLAN

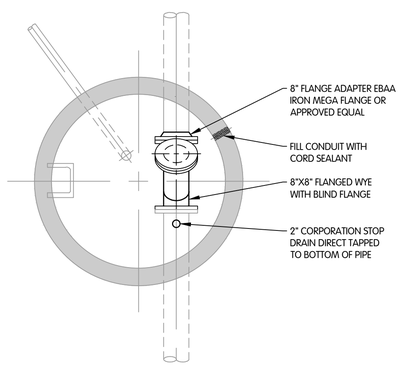

FLOW METER/BYPASS MANHOLE CONVERSION

NEW WORK PLAN

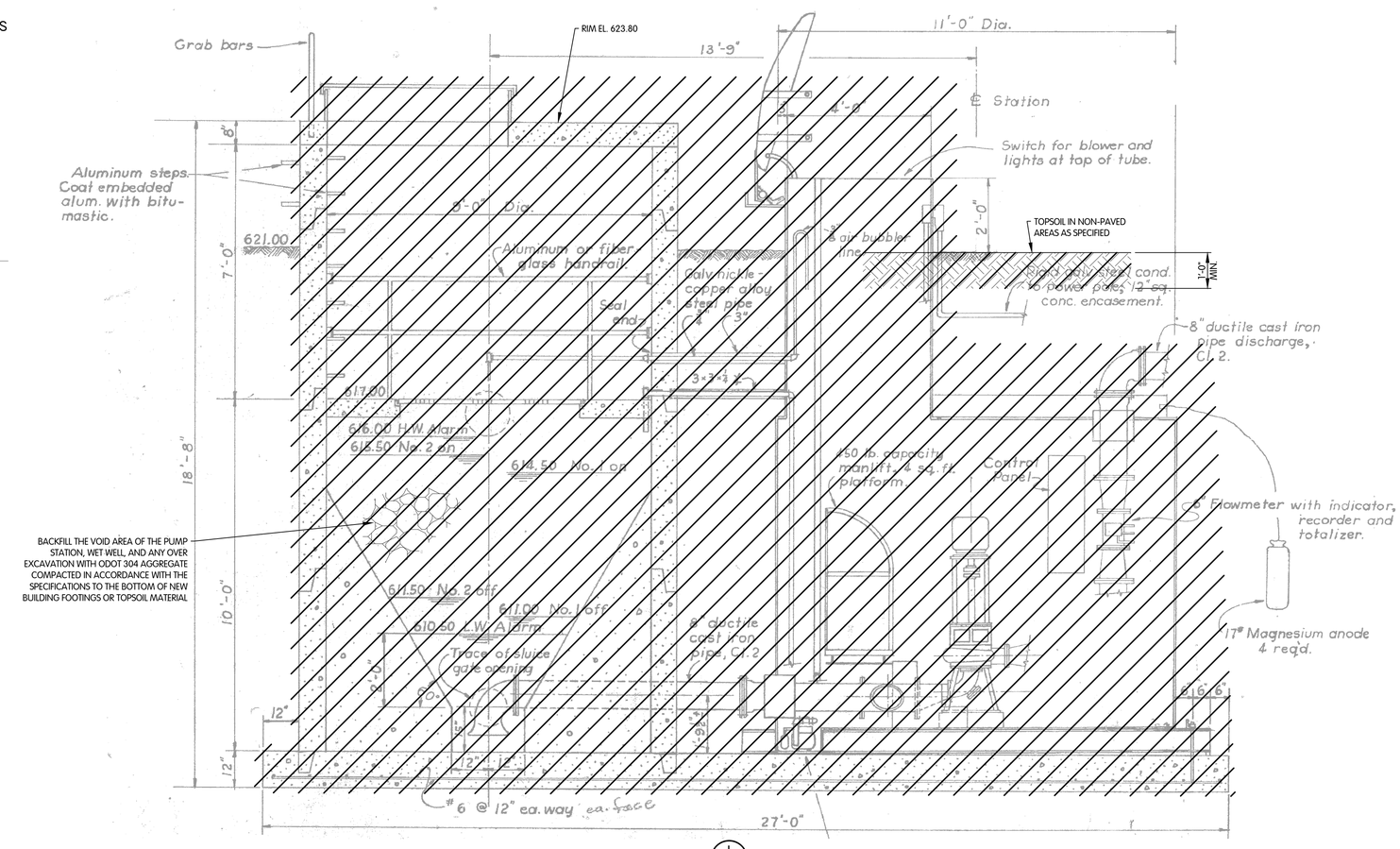

SECTION I / R-I

NORTHWESTERN THE DISTRICT WATER & SEWER

PUMP STATION REMOVALS

NORTHWESTERN WATER AND SEWER DISTRICT,
WILLOWBEND PUMP STATION IMPROVEMENTS, SS-307

NO.	DATE	REVISIONS AFTER ISSUED FOR BID	BY
5			
4			
3			
2			
1			

Jones & Henry Engineers, Ltd.

Fluid thinking®.
www.JHeng.com

JOB NO.	796-7215.002
SCALE	1/2" = 1'-0"

THIS LINE SCALES 1" WHEN PLOTTED TO NOTED SCALE

DESIGNED	DRAWN	CHECKED
TAB	BJD	TAB

STATUS: ISSUED FOR BID
DATE: AUGUST 2021

SHEET NO.
R-1
8 OF 50

TOL-7215002R01
8/26/2021 8:02 AM
8/26/2021 8:02 AM

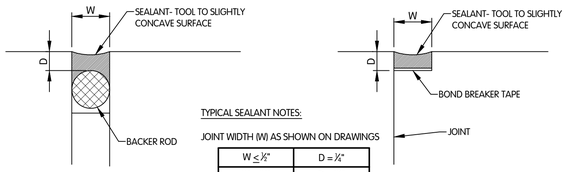

STANDARD

SHALLOW

TYPICAL SEALANT NOTES:

JOINT WIDTH (W) AS SHOWN ON DRAWINGS

W ≤ ½"	D = ¼"
W = ¾"	D = ⅜"
W ≥ 1"	D = ½"

1. BLUNT SHARP EDGES OF CONCRETE JOINTS WITH GRINDER BEFORE SEALING.

TYPICAL SEALANT DETAILS

NTS

WALL CORNER REINFORCEMENT NOTES:

1. SAME SIZE AND SPACING AS HORIZONTAL REINFORCEMENT, UNLESS SHOWN OTHERWISE.
2. LAP SPLICE LENGTH FOR TOP BARS, UNLESS SHOWN OTHERWISE.
3. ALTERNATE DETAIL REQUIRES ENGINEER APPROVAL.

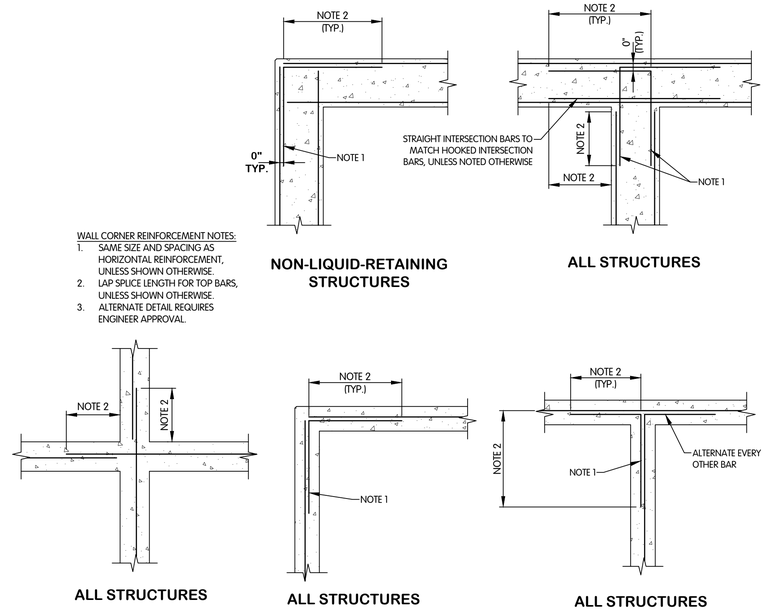

NON-LIQUID-RETAINING STRUCTURES

ALL STRUCTURES

ALL STRUCTURES

ALL STRUCTURES

ALL STRUCTURES

TYPICAL CONCRETE WALL CORNER AND INTERSECTION HORIZONTAL REINFORCEMENT DETAILS

NTS

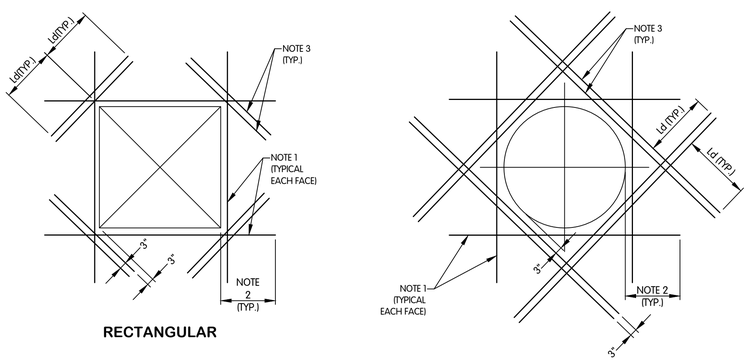

RECTANGULAR

CIRCULAR

TYPICAL ADDITIONAL REINFORCEMENT FOR OPENINGS BETWEEN 8" AND 48"

NTS

REINFORCEMENT AT OPENING NOTES:

1. ADDITIONAL REINFORCEMENT EQUAL IN AREA TO REINFORCEMENT CUT BY OPENING.
2. LAP SPLICE LENGTH FOR TOP BARS.
3. DIAGONAL BARS - EACH FACE, 2 EACH CORNER - SIZE AS FOLLOWS

CONC. THICKNESS	BAR SIZE	DEVELOPMENT LENGTH (Ld)
12" TO 18"	#5	21"
GREATER THAN 18"	#6	25"

4. DIAGONAL BARS NOT REQUIRED FOR OPENINGS WITH LARGEST DIMENSION LESS THAN 12".
5. ONLY DIAGONAL BARS ARE REQUIRED AT DOOR, WINDOW, OR HATCHED OPENING.

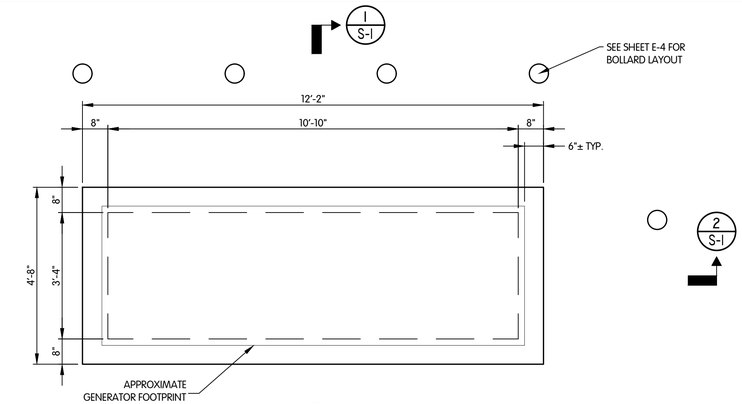

TOP PLAN

1/2"=1'-0"

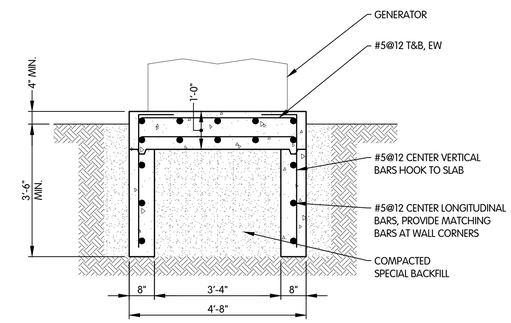

SECTION 1/S-1

1/2"=1'-0"

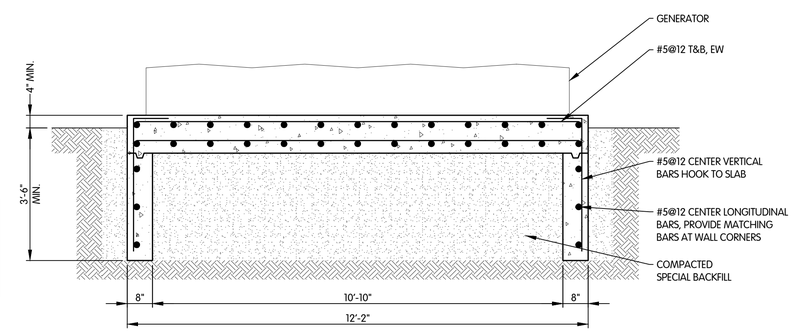

SECTION 2/S-1

1/2"=1'-0"

NOTES:

1. COORDINATE MAT CONDUIT OPENINGS WITH FURNISHED UNIT. PROVIDE #5 CORNER BARS AT SLAB OPENING AND UTILITY PENETRATIONS.
2. PAD DIMENSIONS TO BE CONFIRMED WITH FURNISHED UNIT.

TYPICAL CONCRETE COVER

CONCRETE CAST AGAINST EXPOSED EARTH	3"
SURFACE EXPOSED TO EARTH OR WEATHER	2"
SURFACE EXPOSED TO OR OVER WATER, SEWAGE, OR OTHER LIQUIDS	
SLABS, WALLS, JOISTS:	2"
BEAMS, COLUMNS	
PRIMARY REINFORCEMENT:	2½"
STIRRUPS AND TIES:	2"
OTHER SURFACES	
SLABS, WALLS, JOISTS:	1"
BEAMS, COLUMNS	
PRIMARY REINFORCEMENT:	2"
STIRRUPS AND TIES:	1½"

LAP SPLICE LENGTH (IN.)

UNLESS SHOWN OTHERWISE

BAR SIZE	CLEAR COVER 2" OR MORE		CLEAR COVER LESS THAN 2"	
	TOP REINFORCEMENT	BOTTOM AND VERTICAL REINFORCEMENT	TOP REINFORCEMENT	BOTTOM AND VERTICAL REINFORCEMENT
#3	18	16	18	16
#4	24	19	24	19
#5	30	23	30	23
#6	36	28	40	31
#7	42	33	54	42
#8	51	39	71	55

NOTE:
TOP REINFORCEMENT IS DEFINED AS HORIZONTAL REINFORCEMENT WITH MORE THAN 12" OF FRESH CONCRETE CAST BENEATH THE BAR. HORIZONTAL BARS IN WALLS SHALL BE CONSIDERED AS TOP REINFORCEMENT.

LOAD TRANSFER DOWELS

T = 6" OR LESS	¾" x 16"
T = GREATER THAN 6" & UP TO 8"	1" x 18"
T = GREATER THAN 8"	1¼" x 18"

NORTHWESTERN THE DISTRICT WATER & SEWER

GENERATOR PAD STRUCTURAL PLAN AND SECTIONS

NORTHWESTERN WATER AND SEWER DISTRICT, WILLOWBEND PUMP STATION IMPROVEMENTS, SS-307

NO.	DATE	REVISIONS AFTER ISSUED FOR BID	BY
5			
4			
3			
2			
1			

Jones & Henry Engineers, Ltd.

Fluid thinking©.
www.JHeng.com

JOB NO. 796-7215.002

SCALE AS NOTED

THIS LINE SCALES 1" WHEN PLOTTED TO NOTED SCALE

DESIGNED	DRAWN	CHECKED
TAB	BJD	TAB

STATUS: ISSUED FOR BID

DATE: AUGUST 2021

SHEET NO.

S-1

9 OF 50

TOL-7215\0251-9 PLANS SECTIONS AND DETAILS
8/12/2021 10:34 AM BDRILL
8/12/2021 2:43 PM

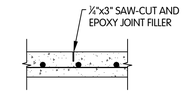

FLOOR CONTROL JOINT
½"=1'-0"

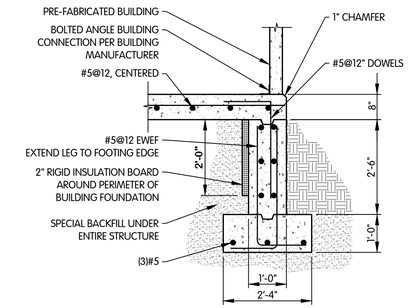

SECTION 3 / PE-3
½"=1'-0"

NORTHWESTERN
THE DISTRICT
WATER & SEWER

SANITARY SEWER PUMP STATION
STRUCTURAL
SECTION AND DETAIL

NORTHWESTERN WATER AND SEWER DISTRICT,
WILLOWBEND PUMP STATION IMPROVEMENTS, SS-307

NO.	DATE	REVISIONS AFTER ISSUED FOR BID	BY
5			
4			
3			
2			
1			

Jones & Henry
Engineers, Ltd.

Fluid thinking©.
www.JHeng.com

JOB NO. 796-7215.002

SCALE AS NOTED

THIS LINE SCALES 1" WHEN
PLOTTED TO NOTED SCALE

DESIGNED	DRAWN	CHECKED
TAB	RGW	TAB

STATUS: ISSUED FOR BID
DATE: AUGUST 2021

SHEET NO.
S-2
10 OF 50

TOL-7215002S2-SECTION & DETAIL
8/12/2021 10:04 AM OWD\ - RWORLEY
8/12/2021 2:43 PM

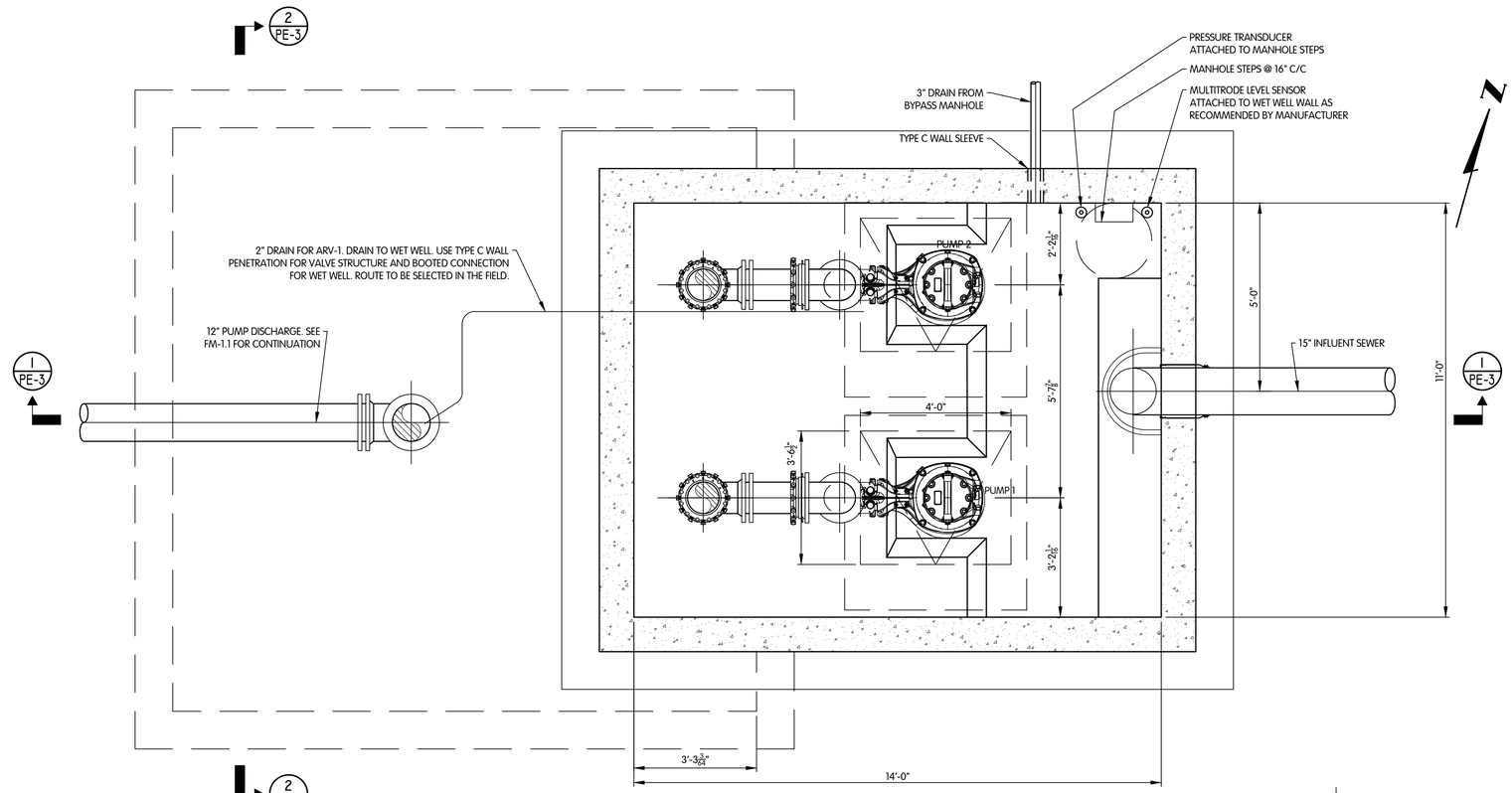

SECTIONAL PLAN

½" = 1'-0"

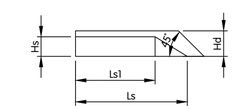

D-D
SECTION

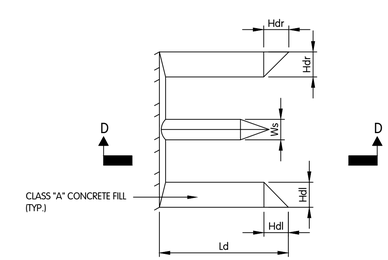

NOTE:
ALL DIMENSIONS SHALL BE COORDINATED WITH MANUFACTURER.

	Ls	Ls1	Hs	Ws	Ld	Hdl	Hdr	Hd
PUMPS	2'-3 3/16"	1'-7 9/16"	4 7/16"	4 13/16"	2'-7 7/16"	5 13/16"	5 13/16"	6"

PUMP VORTEX BREAKER DETAIL

NTS

NORTHWESTERN THE DISTRICT WATER & SEWER

SANITARY SEWER PUMP STATION PIPING AND EQUIPMENT SECTIONAL PLAN

NORTHWESTERN WATER AND SEWER DISTRICT,
WILLOWBEND PUMP STATION IMPROVEMENTS, SS-307

NO.	DATE	REVISIONS AFTER ISSUED FOR BID	BY
5			
4			
3			
2			
1			

Jones & Henry Engineers, Ltd.

Fluid thinking©.
www.JHeng.com

JOB NO. 796-7215.002

SCALE 1/2"=1'-0"

THIS LINE SCALES 1" WHEN PLOTTED TO NOTED SCALE

DESIGNED	DRAWN	CHECKED
TAB	BJD	TAB

STATUS: ISSUED FOR BID

DATE: AUGUST 2021

SHEET NO.
PE-1
11 OF 50

TOL-7215002PE1-9 PLANS SECTIONS AND DETAILS
8/12/2021 10:34 AM - BDRILL
8/12/2021 2:43 PM

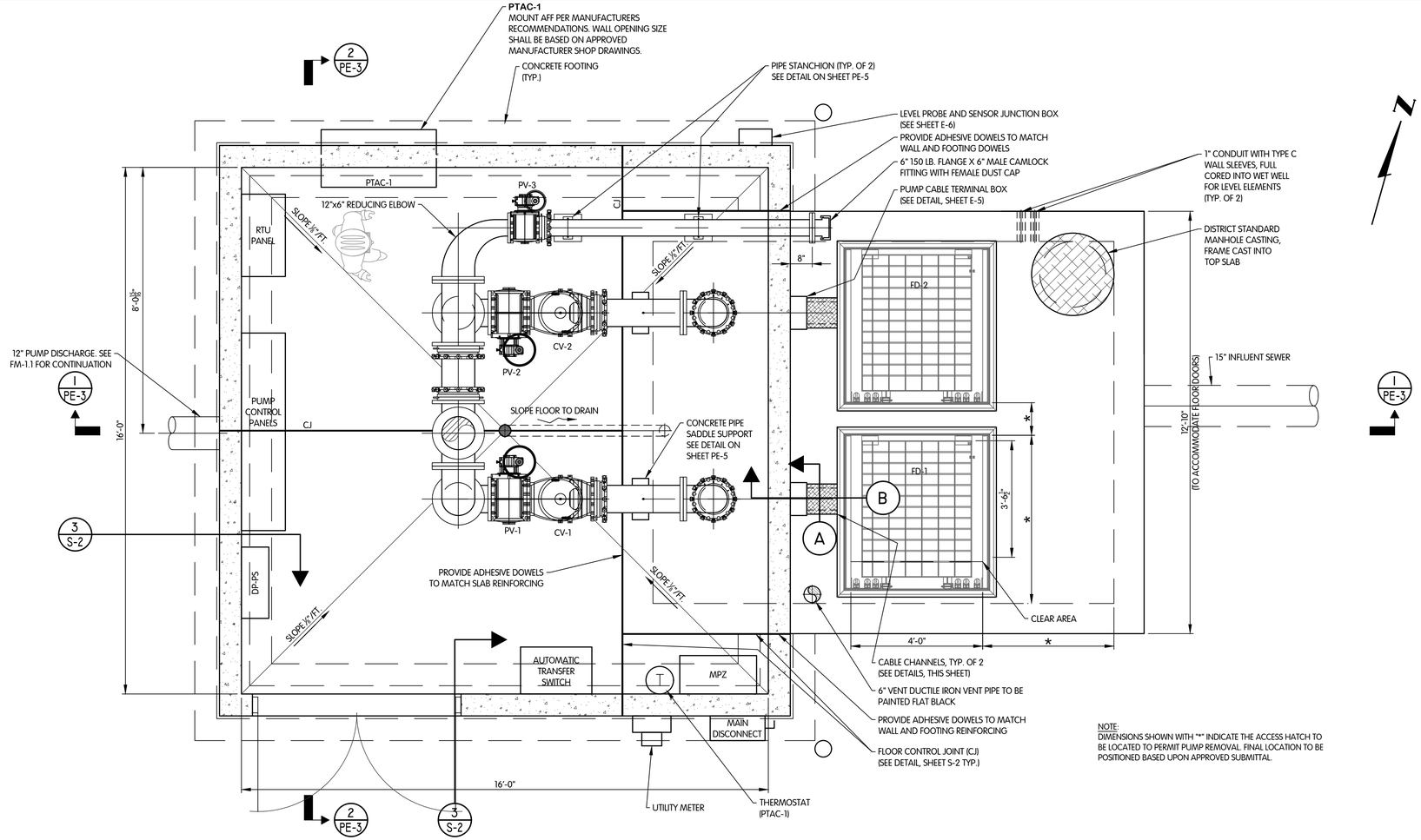

TOP PLAN
1/2"=1'-0"

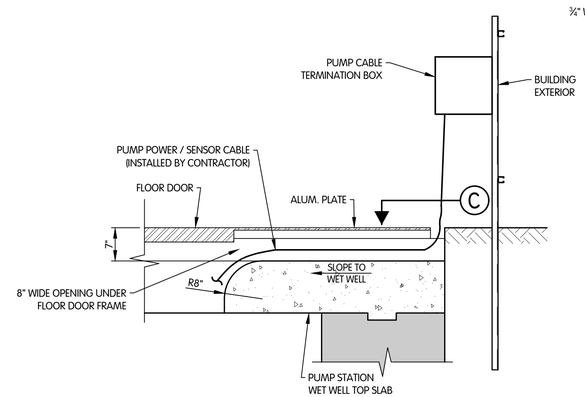

DETAIL B
¾"=1'-0"

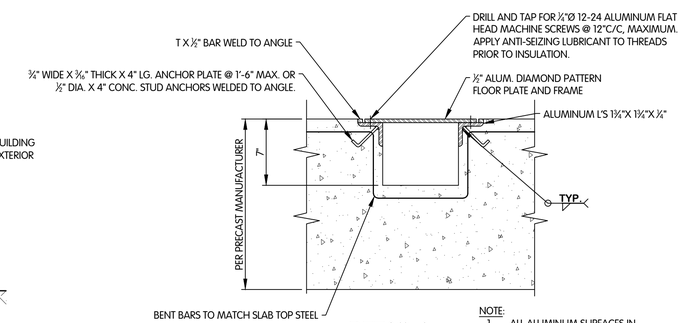

DETAIL A
½"=1'-0"

NOTE:
1. ALL ALUMINUM SURFACES IN CONTACT WITH CONCRETE SURFACES SHALL BE COATED WITH BITUMINOUS MATERIAL.

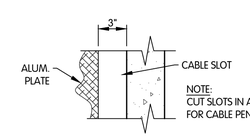

NOTE:
CUT SLOTS IN ALUMINUM PLATE FOR CABLE PENETRATIONS.

DETAIL C
½"=1'-0"

NOTE:
DIMENSIONS SHOWN WITH "*" INDICATE THE ACCESS HATCH TO BE LOCATED TO PERMIT PUMP REMOVAL. FINAL LOCATION TO BE POSITIONED BASED UPON APPROVED SUBMITTAL.

PTAC HEAT PUMP SCHEDULE

TAG	LOCATION	SUPPLY FAN			COOLING CAPACITY (BTUH)	HEAT PUMP CAPACITY (BTUH)	COIL HEAT CAPACITY (BTUH)	REFRIGERANT	MAKE	MODEL	V/PH/HZ	MCA (AMPS)	MOCP (AMPS)	NOTES
		MIN. (CFM)	MAX (CFM)	BLOWER TYPE										
PTAC-1	PS VALVE VAULT	330	365	CENTRIFUGAL	13,300	12,500	10,200	R410A	TRANE	PTHE150TJAB	230/1/60	17.0	20.0	1, 2, 3, 4, 5, 6, 7, 8, 9,10

NOTES:

1. INSTALL PER MANUFACTURERS INSTRUCTIONS.
2. PROVIDE INSULATED WALL SLEEVE.
3. PROVIDE WITH A STAMPED ALUMINUM OUTDOOR GRILLE WITH VERTICAL LOUVERS.
4. PROVIDE WITH PERMANENT, CLEANABLE NYLON MESH FILTER.
5. PROVIDE WITH ROTARY TYPE COMPRESSOR.
6. PROVIDE WITH A SUBBASE KIT AND LEVELING LEGS FOR WALL SLEEVE SUPPORT IF REQUIRED.
7. PROVIDE WITH A 230/1/60 POWER CORD FOR PLUGGING INTO A WALL MOUNTED RECEPTACLE.
8. EVAPORATOR COIL ENETERING AIR DRY BULB/WET BULB TEMPERATURES: 80/67 DEGREES F.
9. CONDENSING UNIT AMBIENT AIR DRY BULB TEMPERATURE: 90 DEGREES F.
10. PROVIDE HARD WIRED REMOTE CLASS 2, HARD WIRED THERMOSTAT FOR UNIT CONTROL.

NORTHWESTERN THE DISTRICT WATER & SEWER

SANITARY SEWER PUMP STATION PIPING AND EQUIPMENT PLAN

NORTHWESTERN WATER AND SEWER DISTRICT, WILLOWBEND PUMP STATION IMPROVEMENTS, SS-307

NO.	DATE	REVISIONS AFTER ISSUED FOR BID	BY

Jones & Henry Engineers, Ltd.
Fluid thinking®.
www.JHeng.com

JOB NO.	796-7215.002
SCALE	AS NOTED
THIS LINE SCALES 1" WHEN PLOTTED TO NOTED SCALE	
DESIGNED	TAB
DRAWN	BJD
CHECKED	TAB
STATUS:	ISSUED FOR BID
DATE:	AUGUST 2021
SHEET NO.	PE-2
	12 OF 50

TOL-7215.002PE-L-10 PLANS SECTIONS AND DETAILS
8/12/2021 2:44 PM - BDRILL
8/12/2021 2:43 PM

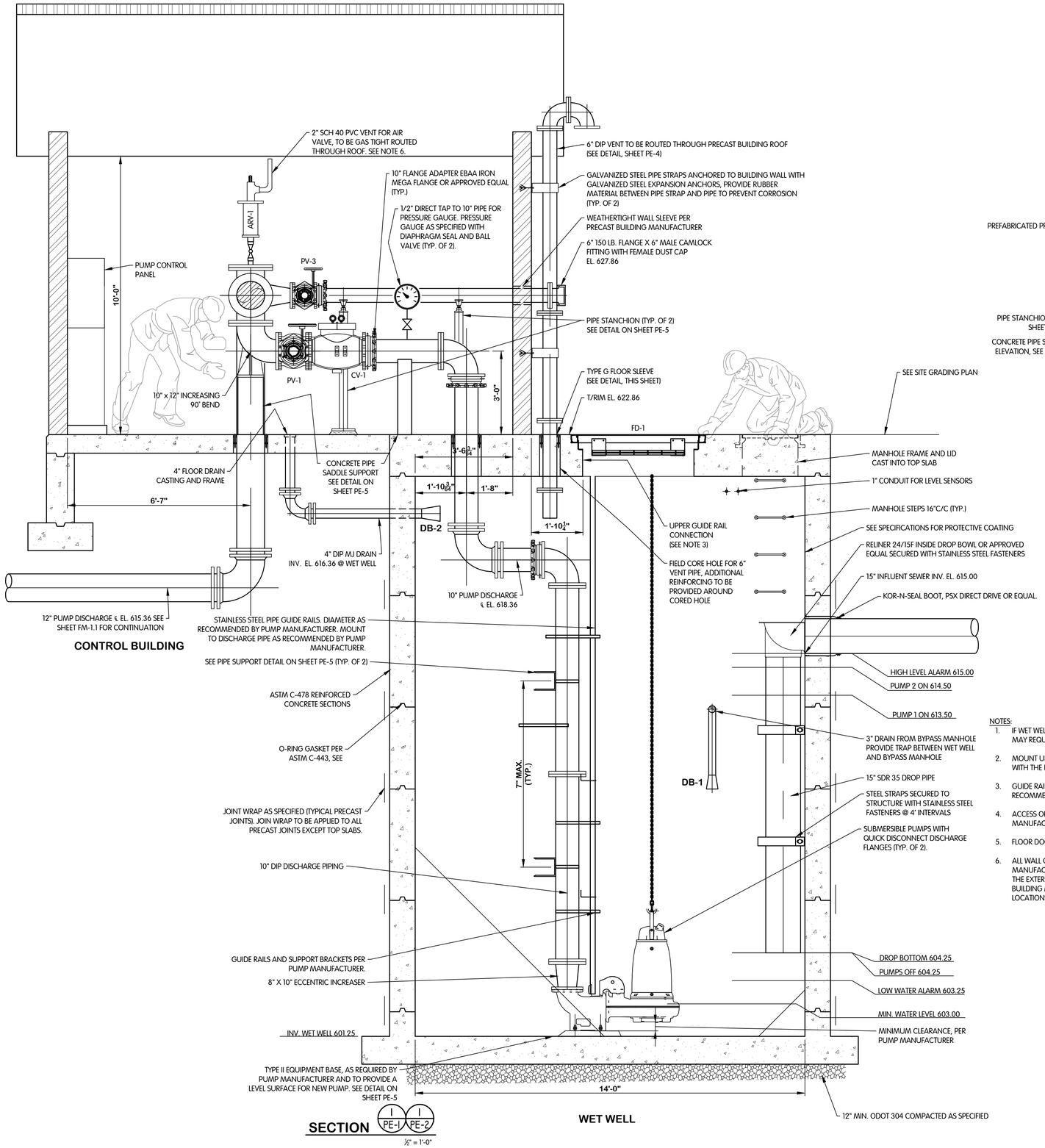

SECTION 1 PE-1 / 1 PE-2
½" = 1'-0"

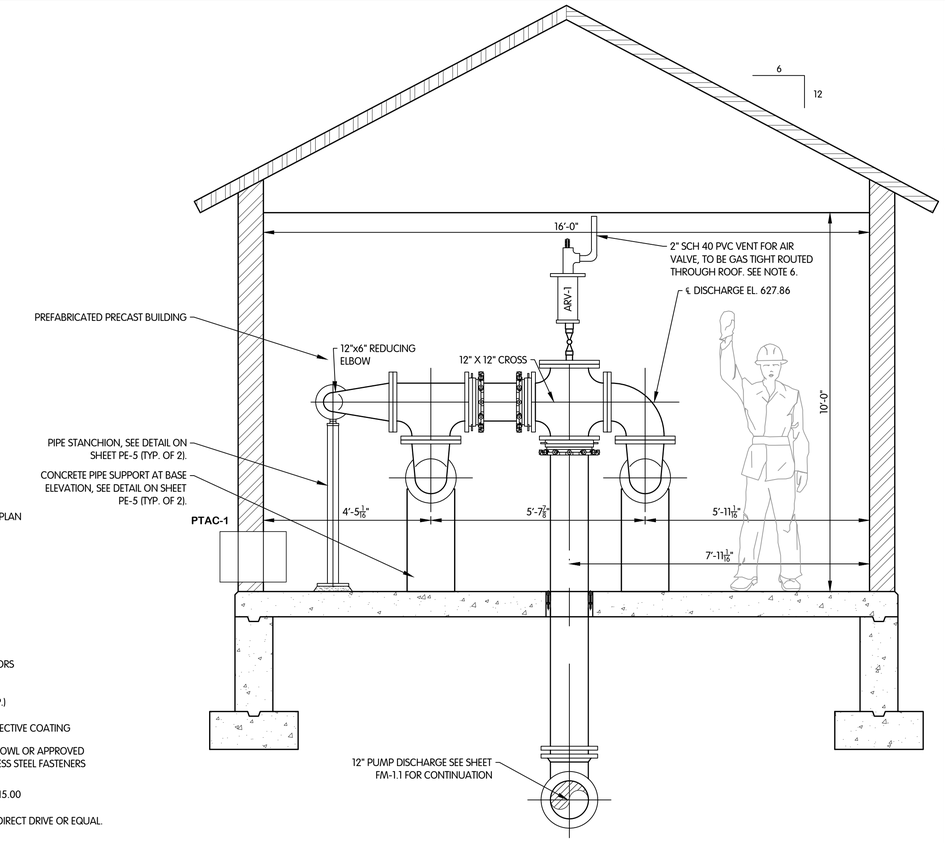

SECTION 2 PE-1 / 2 PE-2
½" = 1'-0"

NOTES:

1. IF WET WELL IS TO BE OPEN WITHOUT THE TOP SLAB FOR A PERIOD OF TIME, THE ENGINEER MAY REQUIRE THE STRUCTURE BE FILLED WITH WATER FOR FLOATATION PROTECTION.
2. MOUNT UPPER END OF PUMP GUIDE RAIL TO STRUCTURE / FLOOR DOORS IN ACCORDANCE WITH THE PUMP MANUFACTURER'S RECOMMENDATIONS.
3. GUIDE RAIL CONSTRUCTION SHALL BE COMPATIBLE WITH THE PUMP MANUFACTURER'S RECOMMENDATIONS.
4. ACCESS OPENING AND ANCHOR BOLTS TO BE LOCATED BASED UPON PUMP MANUFACTURER'S STANDARD DRAWINGS FOR LAYOUT AND GUIDE RAIL DIAMETER SELECTED.
5. FLOOR DOOR DRAINS SHALL BE ROUTED INTO THE WET WELL..
6. ALL WALL OR ROOF PENETRATIONS SHALL BE MADE IN ACCORDANCE WITH THE BUILDING MANUFACTURERS' RECOMMENDATIONS. ALL PANELS AND EQUIPMENT TO BE MOUNTED TO THE EXTERIOR OF THE PREFABRICATED PRECAST BUILDING IN ACCORDANCE WITH THE BUILDING MANUFACTURERS RECOMMENDATIONS FOR MATERIALS, METHODS AND LOCATIONS.

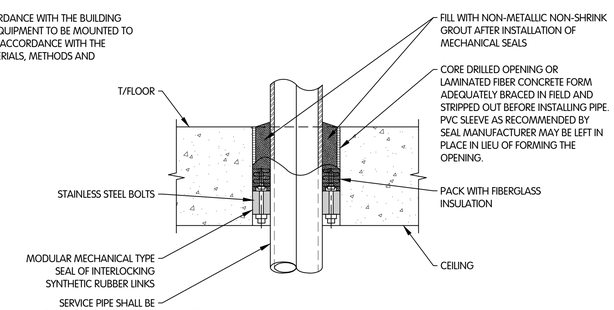

NOTE:
CONCRETE SHALL BE WORKED IN AND VIBRATED TO ELIMINATE ALL VOIDS IN CONCRETE - IF VOIDS DO REMAIN, FILL WITH GROUT BEFORE INSTALLING PIPE AND RUBBER SEALS.

TYPE G FLOOR SLEEVE
(GAS TIGHT) ½"=1'-0"

NORTHWESTERN THE DISTRICT WATER & SEWER

SANITARY SEWER PUMP STATION
PIPING AND EQUIPMENT
SECTIONS

NORTHWESTERN WATER AND SEWER DISTRICT,
WILLOWBEND PUMP STATION IMPROVEMENTS, SS-307

NO.	DATE	REVISIONS AFTER ISSUED FOR BID	BY
5			
4			
3			
2			
1			

Jones & Henry Engineers, Ltd.
Fluid thinking©.
www.JHeng.com

JOB NO. 796-7215.002
SCALE 1/2" = 1'-0"
THIS LINE SCALES 1" WHEN PLOTTED TO NOTED SCALE

DESIGNED	DRAWN	CHECKED
TAB	BJD	TAB

STATUS: ISSUED FOR BID
DATE: AUGUST 2021
SHEET NO.
PE-3
13 OF 50

TOL-7215002PE5-SECTION
8/27/2021 9:45 AM - BDRILLL
8/12/2021 2:44 PM

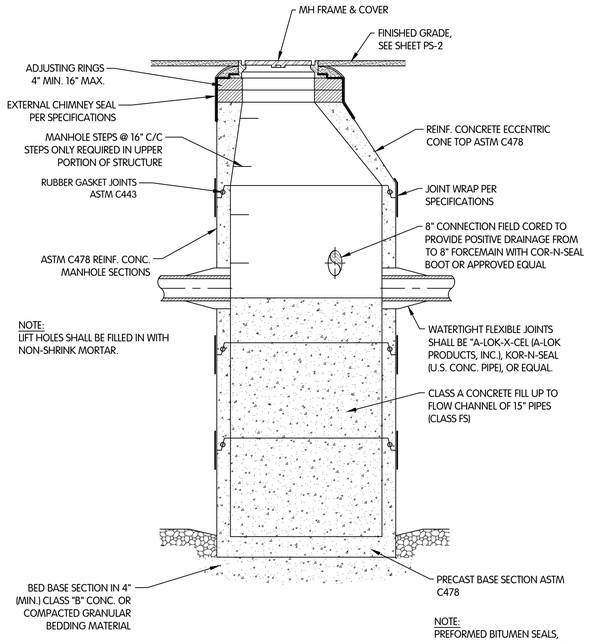

NOTE:
LIFT HOLES SHALL BE FILLED IN WITH NON-SHRINK MORTAR.

NOTE:
PREFORMED BITUMEN SEALS, KENT SEAL OR EQUAL, MAY BE USED BETWEEN ADJUSTING RINGS IN LIEU OF MORTAR.

MANHOLE 2
½"= 1'-0"

DIMENSION TABLE (H)							
LOCATION	A	B	C	D	RIM	INV.	HT.
ARV-1	*	*	*	*			
ARV-2	5.30	6.76	2.38	1.70	622.50	614.70	7'-0"
ARV-3	7.12	8.58	4.20	1.38	591.30	584.68	8'-6"
ARV-4	4.53	5.59	1.20	2.47	597.20	589.84	7'-0"

* SEE SHEET PE-3

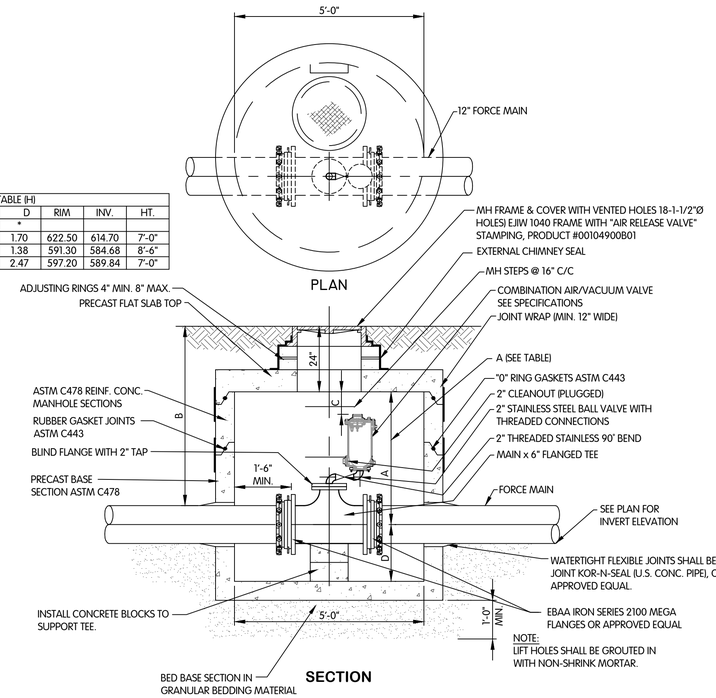

NOTE:
LIFT HOLES SHALL BE GROUTED IN WITH NON-SHRINK MORTAR.

AIR / VACUUM RELIEF MANHOLE STRUCTURE
½"=1'-0"

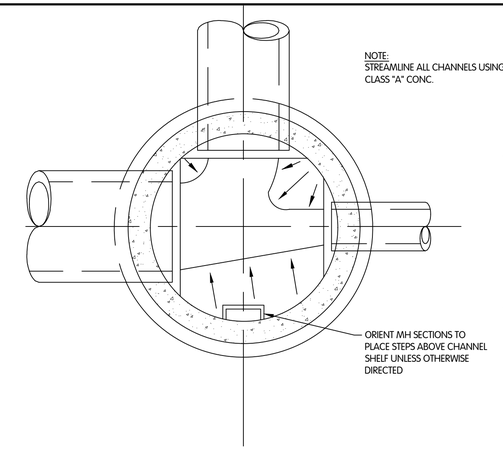

NOTE:
STREAMLINE ALL CHANNELS USING CLASS "A" CONC.

SECTIONAL PLAN
½"=1'-0"

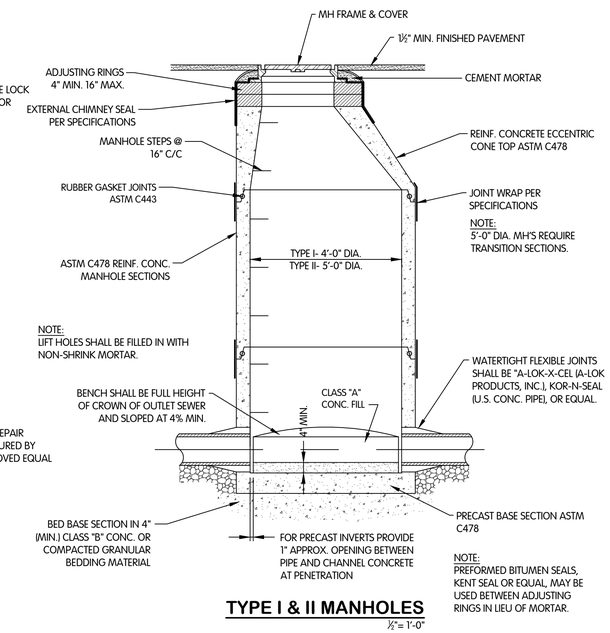

NOTE:
LIFT HOLES SHALL BE FILLED IN WITH NON-SHRINK MORTAR.

NOTE:
5'-0" DIA. MH'S REQUIRE TRANSITION SECTIONS.

NOTE:
PREFORMED BITUMEN SEALS, KENT SEAL OR EQUAL, MAY BE USED BETWEEN ADJUSTING RINGS IN LIEU OF MORTAR.

TYPE I & II MANHOLES
½"= 1'-0"

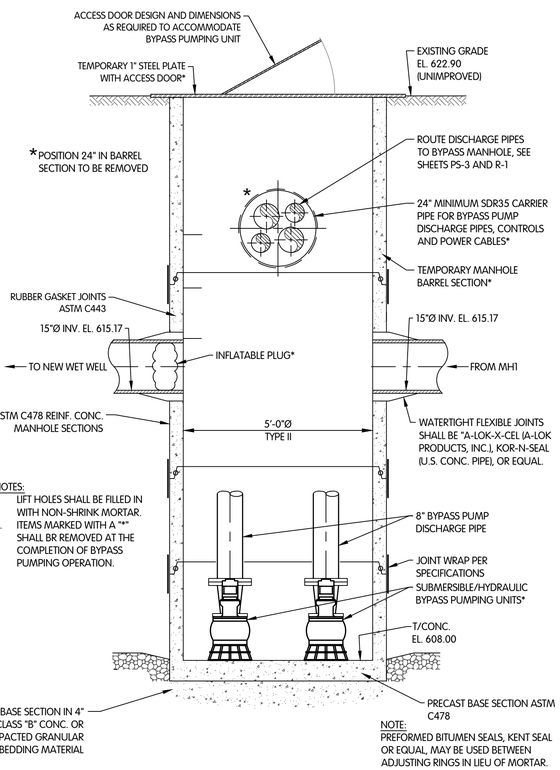

NOTES:
1. LIFT HOLES SHALL BE FILLED IN WITH NON-SHRINK MORTAR.
2. ITEMS MARKED WITH A "*" SHALL BR REMOVED AT THE COMPLETION OF BYPASS PUMPING OPERATION.

NOTE:
PREFORMED BITUMEN SEALS, KENT SEAL OR EQUAL, MAY BE USED BETWEEN ADJUSTING RINGS IN LIEU OF MORTAR.

BYPASS WET WELL MANHOLE 2
½"= 1'-0"

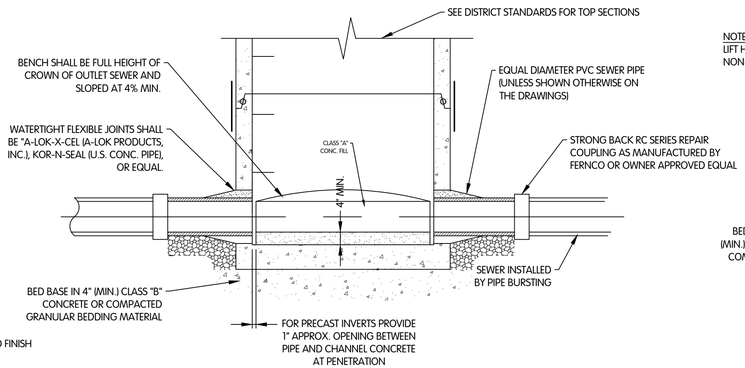

MANHOLE 1
½"= 1'-0"

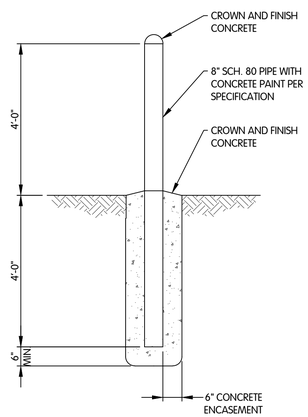

BOLLARD DETAIL
½" = 1'-0"

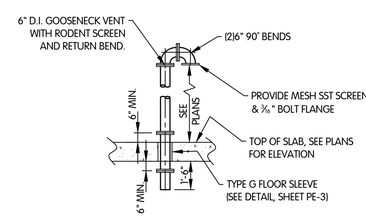

GOOSNECK VENT PIPE DETAIL
¼" = 1'-0"

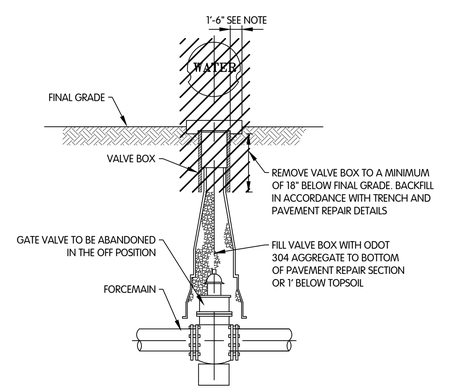

VALVE ABANDONMENT DETAIL
NTS

NORTHWESTERN THE DISTRICT WATER & SEWER

PIPING AND EQUIPMENT DETAILS

NORTHWESTERN WATER AND SEWER DISTRICT,
WILLOWBEND PUMP STATION IMPROVEMENTS, SS-307

NO.	DATE	REVISIONS AFTER ISSUED FOR BID	BY
5			
4			
3			
2			
1			

Jones & Henry Engineers, Ltd.
Fluid thinking©.
www.JHeng.com

JOB NO.	796-7215.002
SCALE	AS NOTED

THIS LINE SCALES 1" WHEN PLOTTED TO NOTED SCALE

DESIGNED	DRAWN	CHECKED
TAB	BJD	TAB

STATUS: ISSUED FOR BID
DATE: AUGUST 2021

SHEET NO.
PE-4
14 OF 50

TOL-7215002PE2-H PIPING AND EQUIPMENT DETAILS
8/27/2021 10:42 AM - BDRILL
8/12/2021 2:44 PM

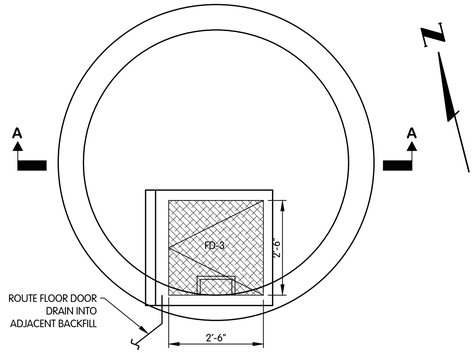

TOP PLAN

½"=1'-0"

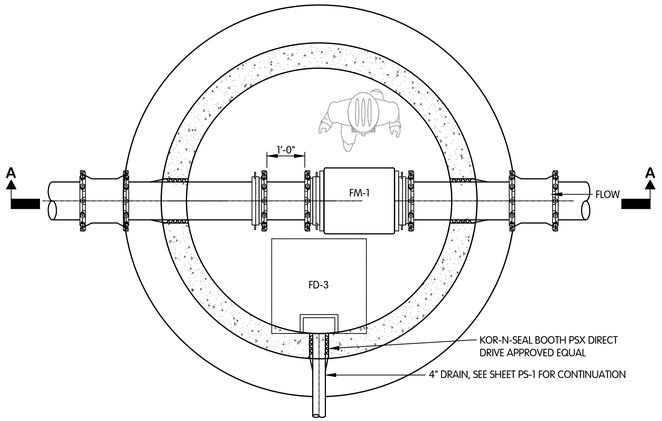

PLAN AT ELEVATION 613.00

½"=1'-0"

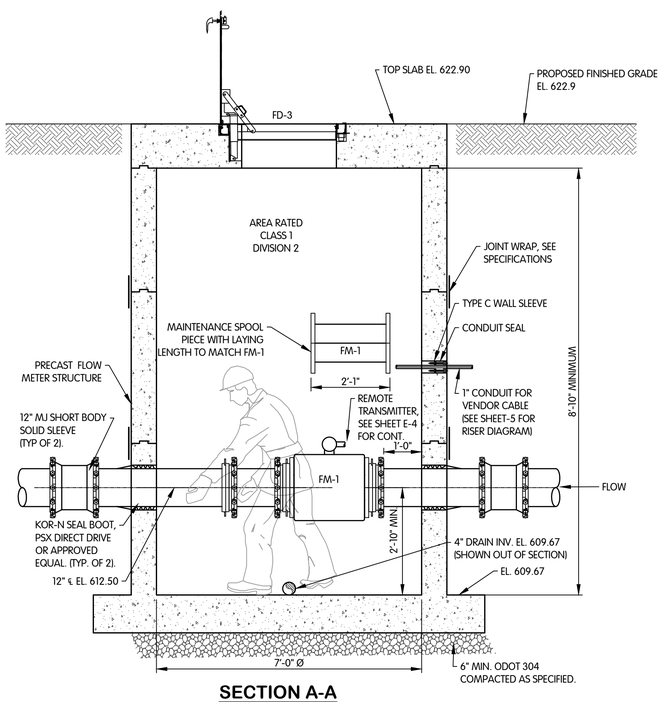

SECTION A-A

½"=1'-0"

FLOW METER STRUCTURE

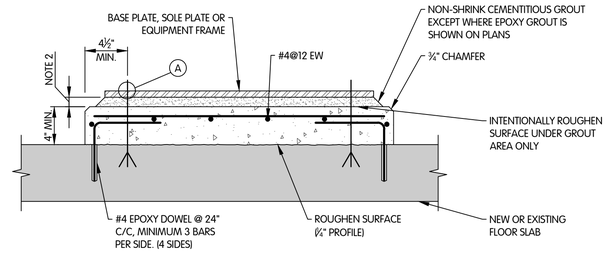

TYPE II (WITH CONCRETE BASE PAD)

1½" = 1'-0"

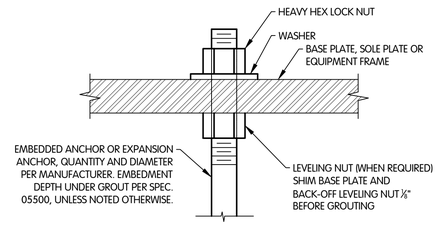

EQUIPMENT BASE NOTES:

1. CONCRETE BASE PAD DIMENSIONS SHALL BE 4" LARGER THAN FURNISHED EQUIPMENT BASE ON ALL SIDES, UNLESS NOTED OTHERWISE.
2. GROUT THICKNESS UNDER EQUIPMENT BASES SHALL BE AS FOLLOWS:
   A.) 3" MAX. UNLESS NOTED OTHERWISE
   B.) 1" MIN. FOR NON-SHRINK CEMENTITIOUS GROUT, U.N.O.
   C.) 2" MIN. FOR EPOXY GROUT, U.N.O.
3. WHEN BASE IS ON ELEVATED SLAB THE SLAB BARS SHALL NOT BE CUT. USE REBAR FINDER EQUIPMENT TO LOCATE BARS AND ADJUST ACHORAGE LOCATIONS TO MISS FLOOR BARS.

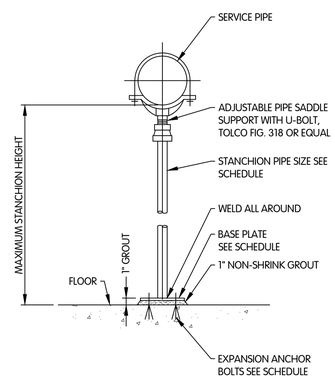

NOTES:

1. HOT DIP GALVANIZE EXTERIOR STANCHIONS AFTER FABRICATION. PRIME PAINT AND FINISH PAINT INTERIOR STANCHIONS.
2. FOR STANCHION PIPES AT BASE ELBOWS, SUBSTITUTE A MOUNTING PLATE FOR THE SADDLE SUPPORT WITH U-BOLT THAT IS SHOWN IN THE ABOVE DETAIL. MOUNTING PLATE SHALL BE DRILLED TO MATCH BOLT HOLE PATTERN PROVIDED IN BASE ELBOW. MOUNTING PLATE SHALL BE A MINIMUM OF 1/2" THICK.
3. REFER TO SPECIFICATION SECTION 15010 FOR MAXIMUM ALLOWABLE DISTANCE BETWEEN PIPE SUPPORTS. MAXIMUM STANCHION SPACING NOT TO EXCEED 12'-0".

SERVICE PIPE SIZE	STANCHION PIPE SIZE	BASE PLATE SIZE	ANCHOR BOLT SIZE
4" TO 12"	HSS 3.500"x0.216"	10"x⅜"x10"	¾" DIA. W/ 4" EMB.

STANCHION PIPE SUPPORT DETAIL

NTS

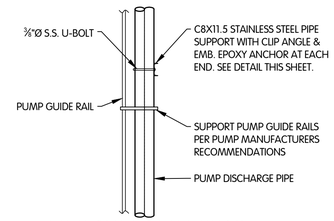

PIPE SUPPORT DETAIL

¼"=1'-0"

NOTE:

1. PROVIDE PIPE SUPPORTS AT THE BOTTOM AND TOP OF THE PUMP DISCHARGE PIPE AND AT SPACING AS SPECIFIED.

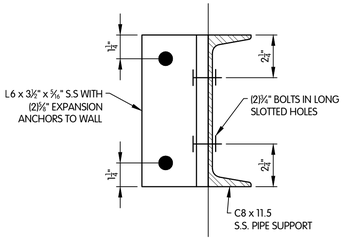

PIPE SUPPORT END DETAIL

3"=1'-0"

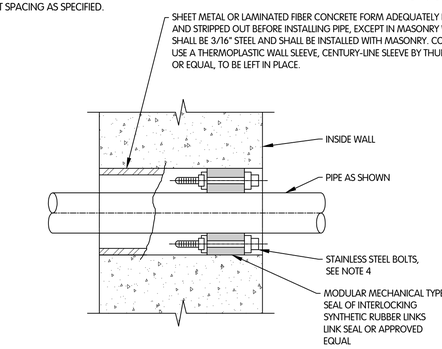

TYPE C

PIPE SLEEVE

NTS

NOTES:

1. EXISTING WALLS SHALL BE CORE DRILLED.
2. CONCRETE SHALL BE WORKED IN AND VIBRATED TO ELIMINATE ALL VOIDS IN CONCRETE - IF VOIDS DO REMAIN, FILL WITH GROUT BEFORE INSTALLING PIPE AND RUBBER SEALS.
3. UNLESS OTHERWISE SHOWN ON THE DRAWINGS ALL INTERIOR WALL PENETRATIONS SHALL USE TYPE C PIPE SLEEVE.
4. BOLTS SHALL BE TIGHTENED IN ACCORDANCE WITH THE SEAL MANUFACTURER'S RECOMMENDATIONS.

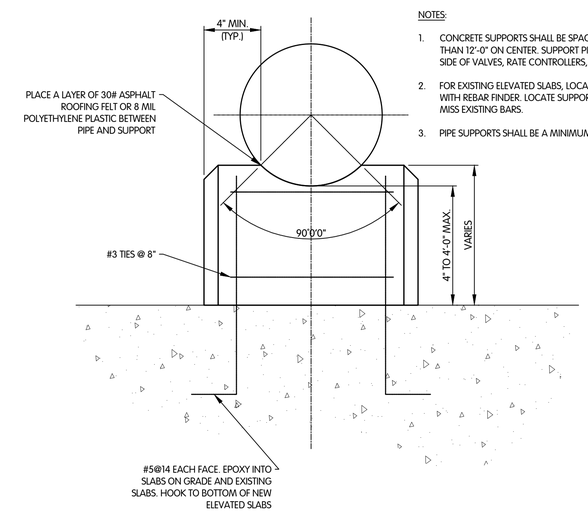

NOTES:

1. CONCRETE SUPPORTS SHALL BE SPACED NOT MORE THAN 12'-0" ON CENTER. SUPPORT PIPING NEAR EACH SIDE OF VALVES, RATE CONTROLLERS, AND COUPLINGS.
2. FOR EXISTING ELEVATED SLABS, LOCATE EXISTING BARS WITH REBAR FINDER. LOCATE SUPPORTS SO DOWELS MISS EXISTING BARS.
3. PIPE SUPPORTS SHALL BE A MINIMUM OF 6" WIDE.

CONCRETE PIPE SUPPORT

¾"=1'-0"

NORTHWESTERN THE DISTRICT WATER & SEWER

PIPING AND EQUIPMENT DETAILS

NORTHWESTERN WATER AND SEWER DISTRICT, WILLOWBEND PUMP STATION IMPROVEMENTS, SS-307

NO.	DATE	REVISIONS AFTER ISSUED FOR BID	BY
5			
4			
3			
2			
1			

Jones & Henry Engineers, Ltd.

Fluid thinking©.
www.JHeng.com

JOB NO. 796-7215.002

SCALE AS NOTED

THIS LINE SCALES 1" WHEN PLOTTED TO NOTED SCALE

DESIGNED	DRAWN	CHECKED
TAB	BJD	TAB

STATUS: ISSUED FOR BID

DATE: AUGUST 2021

SHEET NO.

PE-5

15 OF 50

TOL-7215002PE6-PUMP STATION DETAILS
8/12/2021 10:14 AM BDRILL
8/12/2021 2:44 PM

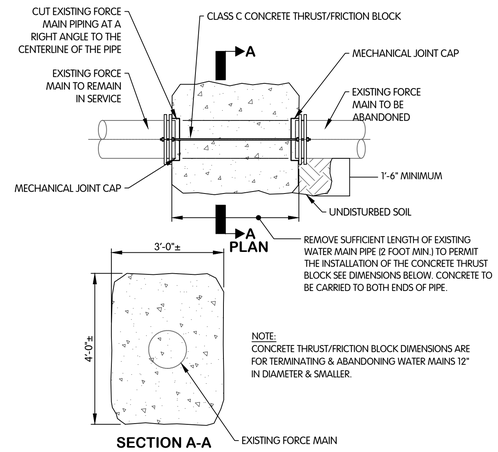

PRESSURE PIPE TERMINATION & ABANDONMENT DETAIL

NTS

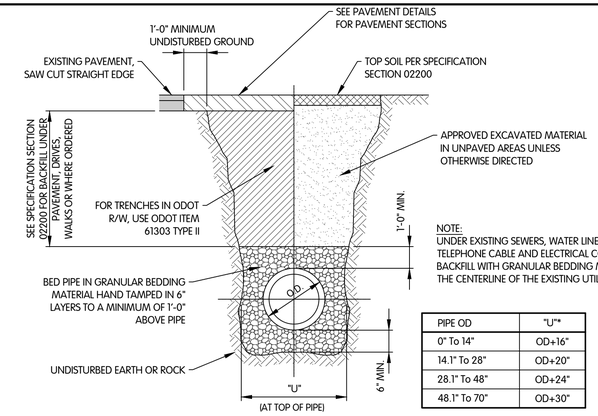

PIPE OD	"U"*
0" To 14"	OD+16"
14.1" To 28"	OD+20"
28.1" To 48"	OD+24"
48.1" To 70"	OD+30"

TRENCH SCHEDULE

* NOTE:
"U" IS THE MINIMUM WIDTH FOR FLEXIBLE PIPES IN ACCORDANCE WITH ASTM D-2321 AND D-2774.

TRENCH DETAIL FOR FLEXIBLE PIPE

NTS

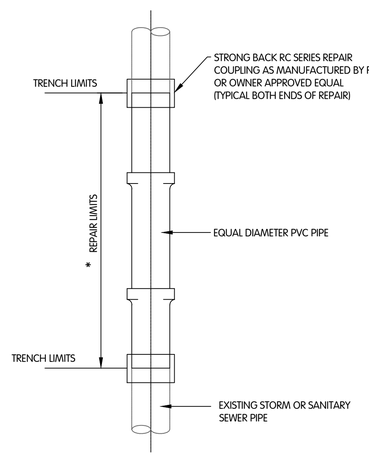

SEWER PIPE REPAIR DETAIL

NTS

* THE REPAIR LIMITS MAY BE EXTENDED TO THE NEXT PIPE JOINT AS DIRECTED BY THE ENGINEER.

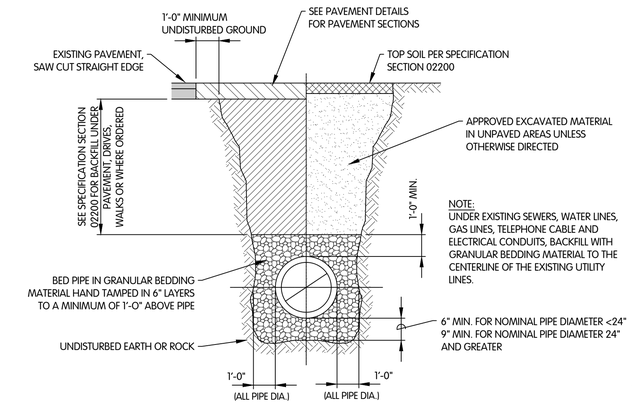

TRENCH DETAIL FOR RIGID PIPE (DIP)

NTS

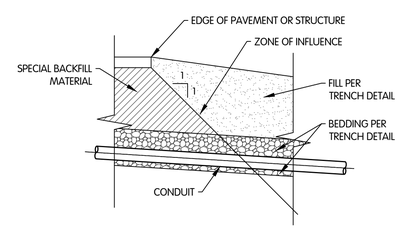

TRANSVERSE ZONE OF INFLUENCE

NTS

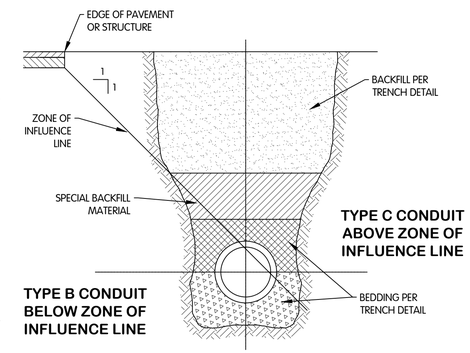

PARALLEL ZONE OF INFLUENCE DETAIL

NTS

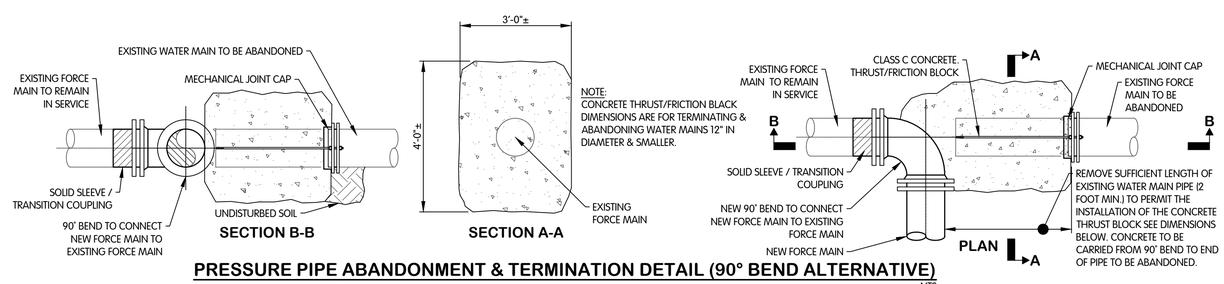

PRESSURE PIPE ABANDONMENT & TERMINATION DETAIL (90° BEND ALTERNATIVE)

NTS

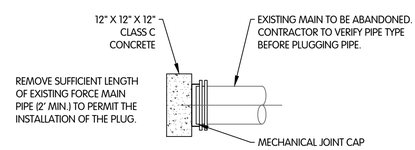

FORCE MAIN PLUG DETAIL

NTS

NORTHWESTERN THE DISTRICT WATER & SEWER

PIPING AND EQUIPMENT DETAILS

NORTHWESTERN WATER AND SEWER DISTRICT,
WILLOWBEND PUMP STATION IMPROVEMENTS, SS-307

NO.	DATE	REVISIONS AFTER ISSUED FOR BID	BY
5			
4			
3			
2			
1			

Jones & Henry Engineers, Ltd.

Fluid thinking®.
www.JHeng.com

JOB NO. 796-7215.002

SCALE AS NOTED

THIS LINE SCALES 1" WHEN PLOTTED TO NOTED SCALE

DESIGNED	DRAWN	CHECKED
TAB	BJD	TAB

STATUS: ISSUED FOR BID

DATE: AUGUST 2021

SHEET NO.

PE-6

16 OF 50

TOL-7215002PE6-PUMP STATION DETAILS (2)
8/26/2021 3:38 PM - CLENDER
8/26/2021 3:38 PM

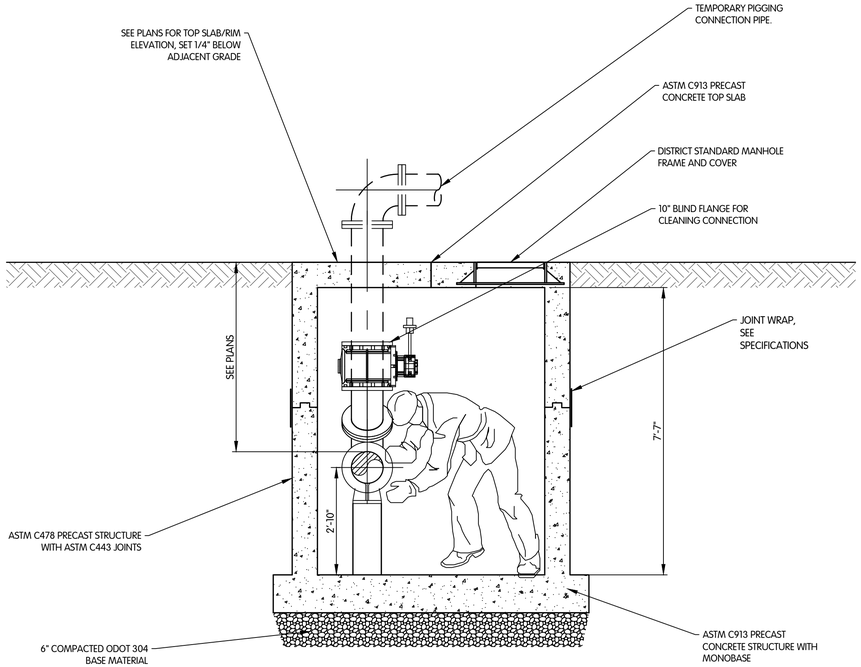

SECTION A-A

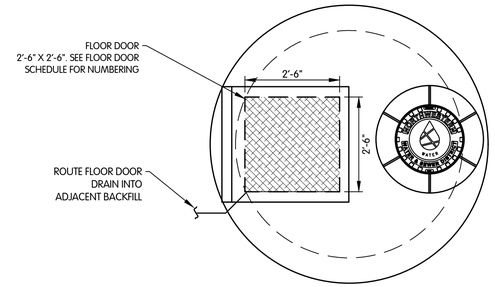

TOP PLAN

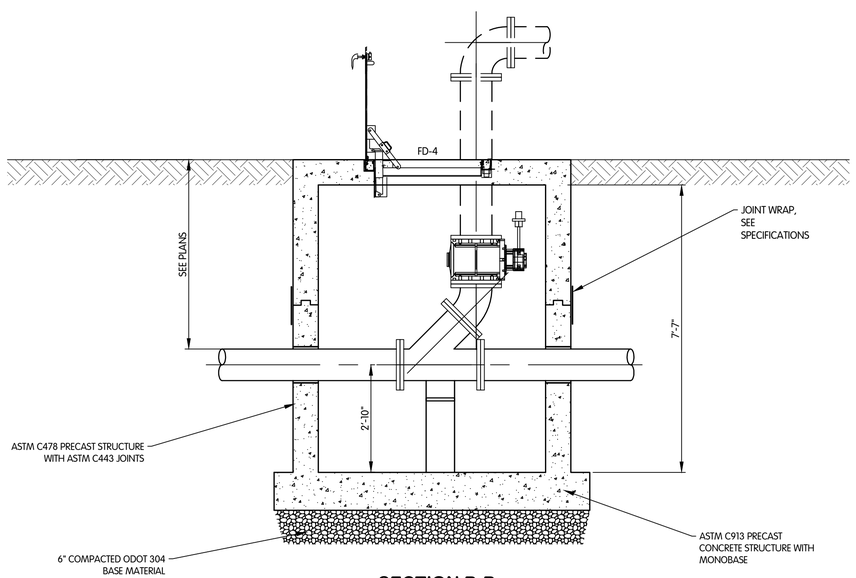

SECTION B-B

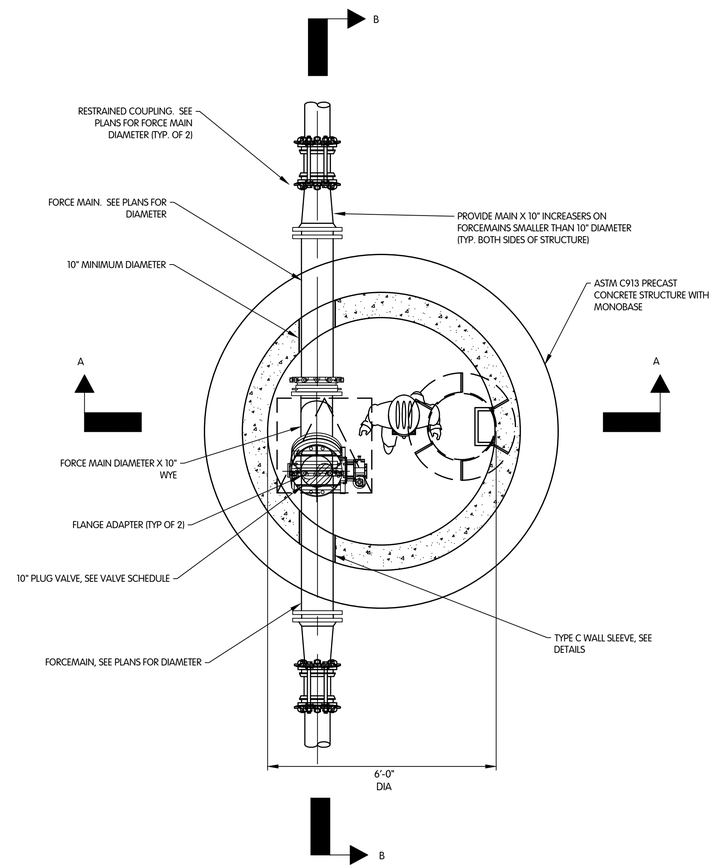

SECTIONAL PLAN

FORCE MAIN PIGGING MANHOLE

½" = 1'-0"

NOTES:

1. SEE PLAN SHEETS FOR ORIENTATION AND LOCATION OF FORCE MAIN PIGGING MANHOLES.
2. WHEN INSTALLING MANHOLES ON EXISTING FORCE MAINS, CONTRACTOR SHALL EXCAVATE EXISTING PIPE TO VERIFY DEPTH PRIOR TO SUBMITTING A SHOP DRAWING.

NORTHWESTERN THE DISTRICT WATER & SEWER

PIPING AND EQUIPMENT DETAILS

NORTHWESTERN WATER AND SEWER DISTRICT, WILLOWBEND PUMP STATION IMPROVEMENTS, SS-307

NO.	DATE	REVISIONS AFTER ISSUED FOR BID	BY
5			
4			
3			
2			
1			

Jones & Henry Engineers, Ltd.

Fluid thinking©.
www.JHeng.com

JOB NO.	796-7215.002
SCALE	1/2" = 1'-0"

THIS LINE SCALES 1" WHEN PLOTTED TO NOTED SCALE

DESIGNED	DRAWN	CHECKED
TAB	BJD	TAB

STATUS: ISSUED FOR BID

DATE: AUGUST 2021

SHEET NO.

PE-7

17 OF 50

TOL-7215002PE6-PUMP STATION DETAILS (3)
8/12/2021 10:54 AM - BDRILL
8/12/2021 2:44 PM

NORTHWESTERN WATER & SEWER DISTRICT
SANITARY SEWER GENERAL NOTES AND SPECIFICATIONS

1.0 GENERAL

1.1 Technical Standards

A. All material and construction shall meet the requirements of the American Water Works Association (AWWA), Ohio Department of Transportation (ODOT), The Ohio Environmental Protection Agency (OEPA), Recommended Standards for Wastewater Facilities (10 States Standards) and American Society of Testing Materials (ASTM).

B. References to the "District" in these specifications shall mean the Northwestern Water and Sewer District or its designated representative.

1.2 Drinking Water Facilities Separation

A. A minimum of 10-foot horizontal and eighteen 18-inches of vertical clearance shall be maintained between sanitary sewers and public water mains. In the event that specified clearances cannot be maintained between the sanitary sewer and water main pipe, the sanitary sewer pipe shall be installed in accordance with the requirements of 10 States Standards.

B. The District shall reserve the right to require the sanitary sewer to be constructed using pressure pipe in accordance 10 States Standards.

1.3 Minimum Cover

A. Gravity and pressure pipe sanitary sewers shall be installed a minimum of 5-feet below final grade. The Contractor shall submit installations requiring less than 5-feet of cover for review by the District.

1.4 Storm Water and Drainage Connections

A. Roof drains, foundation drains, storm sewers, sump pumps and other clean water connections to the sanitary sewer are strictly prohibited.

1.5 Erosion and Sedimentation Control

A. All activities where disturbed soils are anticipated shall be maintained with proper erosion and sedimentation controls in accordance with the OEPA General Permit for Construction Activities and to the satisfaction of the Wood County Engineer or other local agency having jurisdiction over storm water drainage.

1.6 Coordination

A. The Contractor shall schedule and attend a pre-construction meeting to be held prior to commencing any part of the work. The pre-construction meeting shall be scheduled to occur at minimum of one-week prior to the start of any part of the work.

B. The Contractor shall notify the District a minimum of 72-hours prior to the commencement of any part of the work.

C. The Contractor shall submit any proposed changes to the approved design plan in writing to the District for review.

D. The Contractor shall promptly notify the District of any discrepancies between the requirements of these Specifications.

1.7 Inspections

A. All work is subject to inspection and review of the District.

B. No work shall be permitted without a designated representative of the District present.

C. Sewer pipe invert elevations will be checked at manholes to ensure proper grade.

D. Sewers with grades less than the design grades shall be rejected. Rejected sewers shall be replaced at no additional cost to the District.

1.8 Construction Limits

A. The Contractor must at all times conduct his operations within the public right-of-way, easements, or work agreements as shown.

1.9 Existing Utilities

A. The location of all utilities shown on the plans are as obtained from the owners of the utility. No guarantee of accuracy of these utilities is made. The Contractor shall be responsible for verifying the location of existing utilities and protecting the same during the execution of the work.

B. Prior to commencing construction operations in an area which may involve underground utility facilities, the Contractor shall notify the District, and the Ohio Utilities Protection Service (OUPS) (1-800-362-2764).

1.10 Permits

A. The District shall obtain environmental and roadway permits from: OEPA, ODOT, Townships and Wood County Engineer.

B. The Contractor shall obtain all other required work permits prior to commencing any portion of the work.

1.11 Maintenance of Existing Flows

A. The Contractor shall maintain flow in all pipelines encountered during the work. Sewage or other liquid must be handled by the Contractor either by connection into an existing sewer or by temporary pumping to a satisfactory outlet as approved by the District. Sanitary sewage and storm drainage shall not be drained to the same outlet.

B. The Contractor shall submit all plans for pumping flow into alternate outlets for review by the District.

C. Flow maintenance pumps and equipment shall be of sufficient capacity and design to handle the range of flow expected to occur in each sewer. This District can provide guidance regarding the typical existing flow, however, the Contractor shall be responsible for the design and operation of pumping equipment provided to maintain of all existing flows including those in excess of the District's recommendations.

D. The Contractor shall be prepared to perform the work on weekends and or evenings so as to minimize disruptions to the public.

1.12 Safety

A. The provision of all safety measures shall be responsibility of the Contractor.

B. Contractors performing work under these specifications shall conduct the work in accordance with all applicable local, State and Federal safety requirements.

2.0 GRAVITY SANITARY SEWERS, FITTINGS, STRUCTURES AND MATERIALS

2.1 Gravity Sanitary Sewer Pipe Materials

A. Gravity sanitary sewers less than or 18-inches in diameter shall be solid wall premium joint SDR 35 PVC sewer pipe conforming to ASTM D-3034. Gravity sanitary sewer deeper than 20' in depth shall be solid wall premium joint SDR 26 PVC sewer pipe conforming to ASTM D-3034. The minimum cell classification for PVC pipe shall be 12454.

B. Gravity sanitary sewers 18-inches in diameter and larger shall be shall be solid wall, premium joint PVC sewer pipe provided in accordance with ASTM F-679. The required SDR for pipes 18-inches and larger shall be determined on a case by case basis with consideration given to the soil materials and depth of installation.

C. IDENTIFICATION TAPE: An identification tape printed with the wording "SEWER" shall be installed directly over the main approximately 30-inches below grade.

D. SERVICE LATERALS: Sanitary sewer laterals shall be 6-inch diameter premium joint SDR 35 PVC sewer pipe conforming to ASTM D-3034 unless otherwise approved by the District.

E. PRIVATE SEWERS: Private sanitary sewers larger than 6-inches in diameter shall require manhole structures at all connecting sewers and changes in direction in accordance with the 10 States Standards.

F. Private sewers connecting to the District's system shall be constructed in accordance with the requirements of these Specifications.

G. Alternate Pipe materials may be submitted by the Contractor for review by the District.

2.2 Gravity Sanitary Sewer Fittings

A. PVC Pipe Fittings shall have a minimum cell classification of 12454-B as defined in ASTM D-1784. The SDR ratio for fittings shall be equal to or greater than the SDR ratio of the pipe used for the construction of the gravity sewer main.

B. PVC pipe sanitary sewer fittings installed greater than 18-feet below grade shall be ASTM D-3034 SDR-26 deep socket style fittings.

2.3 Sanitary Sewer Manhole Structures

A. All sanitary sewer manholes shall be precast concrete sections provided in accordance with ASTM C-478. Cast in place structures may be substituted for precast sections if approved in advance by the District. The minimum wall thickness shall be as shown on these Specifications with Grade 60 steel reinforcement. Concrete shall have a minimum compressive strength of 5000 psi.

B. ADJUSTMENT RINGS: Precast concrete adjustment rings shall be provided with a maximum of 18-inches of total adjustment height between the bottom of the casting and the top of the manhole chimney section.

C. CASTINGS: Standard cast iron manhole frame and covers shall be East Jordan Iron Works 1020A or Neenah 1772 with the District Logo cast on cover.

D. RUBBER GASKET JOINTS: An o-ring type gasket shall be provided at all manhole joints in accordance with ASTM C-443.

E. MANHOLE JOINT SEALANTS: Manhole joint sealants shall meet the Requirements of ASTM C-990, Federal Specification SS-S-210A or AASHTO M198B.

F. CHIMNEY SEALS: All manhole adjustment rings and casting shall be sealed with an internal or external seal. Internal seals shall be FLEX Seal. External seals shall be WRAPID Seal or approved equal. Alternate chimney seal materials may be submitted for review by the District.

G. MANHOLE STEPS: Manhole steps shall be constructed from polypropylene material, installed at the locations and spacing as specified, meeting the requirements of ODOT Item 711.31.

H. MANHOLE IDENTIFICATION: The following shall be clearly stenciled or impressed on each manhole section: manhole number, casting date, the name or trademark of the manufacturer and location of plant.

I. CONCRETE COLLARS: All manholes located in existing pavement areas shall be provided with a concrete collar unless otherwise approved. The specifications for the local jurisdiction in charge of roadway maintenance shall take precedence when determining the proper concrete collar detail.

2.4 Sanitary Manhole Connections

A. PIPE CONNECTIONS: New piped connections to existing manhole structures shall be a resilient type connection in accordance with the requirements of ASTM C-923. Resilient type pipe connections shall be Kor-N-Seal boots or approved equal.

B. No other utilities shall be installed inside a sanitary sewer manhole. Utilities discovered inside existing sanitary sewer manholes shall be removed by the owner of that utility.

3.0 SANITARY SEWER PRESSURE PIPES AND FITTINGS

A. Polyvinyl Chloride (PVC) pipe shall be used for pressure pipe pipe sizes 4-inches through 16-inches in diameter. Ductile Iron pipe shall be used for pipe larger than 16-inches in diameter and less than or equal to 24-inches in diameter. High Density Polyethylene pipe shall be used for pressure pipe smaller than 4-inches in diameter. The District shall reserve the right to specify the pipe material for pressure pipes based upon the proposed service or installation method.

B. Valves required on forcemains 12-inches in diameter and larger shall be placed in manholes.

C. The opening direction for valves shall be as specified.

D. Bolts, nuts or other required hardware to be placed below grade shall be type 304 stainless steel or shall be coated with a baked ceramic filled fluorocarbon resin.

3.1 Polyvinyl Chloride Pipe

A. PVC pipe for pressure pipes 4-inches through 12-inches in diameter shall be a minimum of DR18 with ductile iron equivalent outside diameter in accordance with AWWA C900. Molecular Oriented Polyvinyl Chloride Pipe (PVCO) pipe for pressure pipes 4-inch through 12-inches in diameter shall be a minimum of PC235 with ductile iron equivalent outside diameter in accordance with AWWA C909.

B. PVC pipe for pressure pipes 14-inches through 16-inches in diameter shall be a minimum of DR18 in accordance with AWWA C905.

C. Restrained joint or fused joint PVC pipe may be used for pressure pipes installed by horizontal directional drilling.

D. Pipe shall be of the integral wall-thickened bell end type incorporating elastomeric gaskets to affect the pressure seal.

E. Pipe shall be designed for direct connection into ductile iron fittings using mechanical joints.

3.2 High Density Polyethylene (HDPE) Pipe

A. HDPE pipe for pressure pipes less than 3-inches in diameter shall be DR9 copper tubing size in accordance with AWWA C901. All fittings for low pressure sewer systems shall be brass compression style fittings.

B. HDPE pipe for pressure pipes 3-inches in diameter shall be DR11 iron pipe size in accordance with AWWA C901. All fittings for low pressure sewer systems shall be brass compression style fittings.

C. HDPE pipe materals to be used for sewer service shall be solid black or black marked with a green identification stripe.

3.3 Ductile Iron Pipe

A. Ductile iron pipe for pressure pipes shall be Class 52, minimum in accordance with AWWA C151 with rubber gasket joints in accordance with AWWA C111. The pipe shall have a cement mortar lining AWWA C104 and asphaltic coating in accordance with AWWA C151. Bronze wedges shall be used at all push-on joints (two per joint). The wedge shall be driven into the push-on joint to provide electrical conductivity between pipes.

3.3 Plug Valves

A. Plug valves shall be resilient seated, non-rising stem type, designed for a maximum working pressure of 200 psi, provided in accordance with AWWA C517. Plug valves shall be provided with a 2-inch operating nut.

B. Plug valves shall have a full port area to match the pressure pipe inside diameter.

C. Plug valves shall be DeZurick PEF Plug valve or approved equal.

3.4 Fittings and Joints

A. Fittings shall be ductile iron, mechanical joint type or push-on type incorporating rubber gaskets. Caps and plug fittings shall be provided with standard tapped connections. Fittings shall be class 250 minimum, provided in accordance with AWWA C111 and C150, asphaltic coated in accordance with AWWA C151 or fusion bonded epoxy coating in accordance with AWWA C116 and cement mortal lined in accordance with AWWA C-104.

B. Fittings for HDPE pipe including but not limited to, elbows, tees, branch saddles, adaptors and transitions shall be HDPE pipe. Fittings shall have the same or better cell classification as the pipe. Fittings shall provide a pressure rating equal to or greater than the HDPE pipe. Joint restraints shall be provided as specified.

C. HPDE pipe shall be joined by heat fusion butt welds between plain ends of pipe. Where conditions are not conducive to allow or manufacturer does not recommend heat fusion butt welds, an electrofusion coupling shall be used.

D. HDPE mechanical joint adaptor and backer ring (retainer gland) shall be used to connect HDPE pipe to PVC or Ductile Iron Pipe (DIP) materials. The mechanical joint adapter shall join to the HDPE pipe as specified and the DIP mechanical joint shall connect to the PVC or DIP end using a standard mechanical joint connection.

3.5 Joint Restraints

A. Mechanical joint restraints shall be provided at all dead ends, bends, tees, valves and other locations as required or specified. Mechanical joint restraints shall be provided in accordance with AWWA C111 and C153. Mechanical joint restraints shall include a restraining mechanism that when actuated, impacts multiple wedging actions against the pipe, increasing its resistance to movement as internal pipe pressure increases. The restraining device shall be constructed of ductile iron with a minimum working pressure of 250 psi and a safety factor of 2:1.

B. The dimensions of the joint restraint shall be such that it can be used with standard mechanical joint bell and tee-head bolts conforming to AWWA C111. Twist-off nuts shall be used to insure proper actuation of the restraining devices.

3.6 Polyethylene Wrap

A. Ductile iron pipe and fittings shall be wrapped in a minimum 8 mil thick polyethylene tube per AWWA C105. Fittings shall be wrapped for a distance of 5-feet on each side of the fitting. Rips, tears, punctures or other damage to the polyethylene tube shall be repaired prior to placement of backfill.

3.7 Valve Boxes

A. Valve boxes shall be 3 piece design, cast iron installed plumb and centered over the valve operator. Valve boxes located in pavement shall be installed so no loads are transmitted by the valve box onto the valve.

B. Valves located more than 5-feet below grade shall be provided with valve extensions.

C. Valve box castings shall be marked "SEWER."

3.8 Locating Wire / Identification Tape / Utility Markers

A. A detectable locating tracer wire shall be installed directly over and on the center of non-metallic pressure pipes in open cut applications along the entire length to provide a reflective (inductive) path to determine pipe alignment and location after installation. The tracer wire shall be brought to the surface at a minimum of 500-foot intervals in a Copperhead Industries SnakPit Roadway tracer box. A 4-foot extra tracer wire extension shall be provided at each access point. The tracer wire shall be brought to the surface on the outside of all valve boxes and manholes. All wire connections shall be made with a Copperhead SnakeBit DryConn Direct Bury 3 way Lug or approved equal.

B. For open cut trench applications, the tracer wire shall be #12 gauge wire with 30 mil polyethylene insulation coating.

C. For horizontal directional drilling applications the tracer wire shall be Copperhead or equal #12 gauge Extra High Strength (EHS) wire that has a minimum of an 1150 lbs break load. The tensile strength of the tracer wire shall be greater than the tensile strength of the pipe being installed by horizontal directional drilling methods.

D. After installation tracer wire shall be tested for continuity. Tracer wire shall be considered acceptable when a continuous non-interrupted read is obtained for the entire length of the pipe line.

E. An identification tape printed with the wording "SEWER" shall be installed directly over the main approximately 30-inches below grade.

F. Utility markers shall be provided over the pressure pipe at intervals not to exceed 1000-feet spacing and at all valves and fittings to properly show the alignment. Markers shall be Carsonite CUM-375 or approved equal. The wording for the markers shall be submitted to the District for review.

4.0 LOW PRESSURE SEWER MATERIALS AND EQUIPMENT

4.1 Grinder Pumps

A. Grinder Pumps shall be manufactured by Environmental One. Model DH071-93 Station Part Number D200B14E22BJ for single pump applications and Model DH152-93 Station Part Number D200L14B18BJ for duplex pump applications. (Model and Part Numbers as of February 2015)

4.2 Electrical

A. All electrical work performed shall comply with the requirements of all local building codes.

B. Electrical conduit required for the installation of the grinder pump may be run through soffit, crawl space, basements or below grade to comply with manufacturer requirements and in accordance with the requirements of all local building codes.

C. The grinder pump alarm box shall be installed with clear line of sight between the grinder pump and the alarm box. The alarm box also must be installed to be clearly visible from the roadway.

4.3 Private Property Coordination

A. The Contractor shall coordinate with private property owners for installation and verification of existing conditions.

B. The private property owners are not authorized to direct the Contractor to make changes in the work as shown or specified. Any changes requested by the private property owner shall be provided to the District for review. The District shall direct any changes to the work as shown or specified.

5.0 INSTALLATION OF GRAVITY SEWERS

5.1 Excavation

A. Excavations shall be made to the outside dimensions and to the depths shown or as specified. Topsoil which is suitable for finish grading shall first be carefully removed, stored separately and replaced, after backfilling and rough grading are complete.

5.2 Pipe Bedding Material

A. Pipe shall be laid on a properly shaped and firm bedding of the type specified meeting the requirements of ODOT Item 603.05. If directed by the District, the Contractor shall excavate unsuitable material below the bottom of the pipe bedding. Unsuitable material removed shall be replaced with granular material per ODOT Item 603.05.

B. Pipe bedding material for flexible pipes shall consist of a bed of granular stone with a thickness as specified below the bottom of the pipe to provide proper support and extending to a plane of above the crown of flexible pipe. Granular bedding material shall be No. 67 or No. 8 aggregate in accordance with ODOT Item 703.11 unless otherwise approved by the District.

5.3 Installation of Pipe

A. Pipe and appurtenances shall be installed true to line, grade and locations shown on the design drawings with joints centered, spigots pushed home and properly supported. Care shall be used in the laying of pipe to ensure the pipe is properly supported for the entire length of the pipe barrel.

B. The minimum grades for pipe sewers shall be in accordance with the requirements of Section 33.4 of 10 States Standards. The minimum grade for 6-inch services shall be 1.00%. Pipe sewers shall not be installed with grades less than the minimums listed without the prior review of the District.

5.4 Manholes

A. The Contractor shall note any damaged or defective manhole sections for review by the District. The District shall reserve the right to direct repairs to damaged or defective manhole sections or to require replacement. Repairs shall be in accordance with the requirements of ASTM C-478.

B. Pipe connections shall be a minimum of 6-inches from any joints in the structure.

C. DROP CONNECTIONS: A drop pipe shall be required for all pipes entering the manhole at an elevation of 24-inches above the flow line of the manhole. The minimum drop pipe diameter for sanitary sewer manholes shall be 6-inches.
1. OUTSIDE DROP CONNECTIONS: All new manholes that include drop connections shall be constructed using an outside drop connection.
2. INSIDE DROP CONNECTIONS: Inside Drop Connections may only be used on existing manholes as approved by the District. The District shall reserve the right to require an outside drop connection to existing manholes. In the event the manhole steps are in conflict with the proposed inside drop connection, the steps shall be relocated as approved by the District.

D. Manhole steps to be relocated or replaced by the Contractor, shall be installed in locations as directed by the District. New step materials shall be provided for all step replacement or relocation.

E. Doghouse type manholes constructed over the existing sewer shall not be permitted. New manholes installed on existing sewers shall be constructed in accordance with the details shown on the plans.

5.4 Connections to Existing Mains

A. New connections to existing PVC sewer mains or services shall be made using solid PVC fittings. Fernco type flexible couplings shall not be permitted.

B. New connections to existing sewers constructed of other materials shall require prior review of the District.

C. All lateral connections on new sewers shall be connected into the sewer main pipe. New lateral pipe connections into existing manholes shall only be made following review of the connection by the District.

5.5 Additional Requirements for Lateral Services

A. All Service Connections must be installed by a District Licensed Sewer Tapper in accordance with the requirements of these specifications.

B. Lateral connections provided for future connections shall be terminated at the public right-of-way with bell end and plug. A treated 2 x 4 board shall be placed at the end of the lateral to within 1-foot of finished grade for future locating purposes. The board shall be marked to indicate that the board is marking the location of a sanitary sewer tap. Service laterals installed to vacant lots shall be installed to a depth no greater than 8-feet below final grade at the public right-of-way unless otherwise approved by the District.

C. A soil dam shall be installed around the lateral to prevent the migration of ground water through the trench. The soil dam shall consist of a non-pervious material place around the pipe along a minimum length of 6-feet between pipe joints. The bell of the pipe shall be properly supported with bedding material as specified.

D. Service laterals shall enter through the basement side wall. Basement floor taps shall not be permitted.

5.6 Maintenance of Trenches and Backfill

A. Backfill shall be to the limits shown on the drawings and according to the compaction requirements of this section. Backfill material shall be placed and compacted for the entire width, length and height of the trench or excavation.

B. Trenches and excavations shall be backfilled immediately after the pipe placed and bedded. Pipe bedding and trench and excavation backfill material shall be placed in the presence of a representative of the District. Backfill shall not contain stones, rock, pieces of masonry, organic material, frozen earth, debris, earth with a high void content or other material considered unsatisfactory by the District.

C. NON-STRUCTURES: Backfill not under structures or outside the pavement influence area shall be compacted in 12-inch layers to 90% of Standard Proctor or as directed by the District for the entire width, length, and vertical height of the trench.

D. STRUCTURES: Backfill under structures or adjacent to pavement shall be ODOT Type 304 or 411 and compacted in 6-inch lifts to 95% of Standard Proctor. Structures include manholes, pump stations, grinder pumps, roads, drives, sidewalks, and any other miscellaneous items called out on the drawings.

E. PAVEMENT INFLUENCE AREA: Excavations below a line extended from the edge of pavement (or back of curb) at a 45 degree angle downward from the surface shall be backfilled as specified for structures. Areas of the excavation above the 45 degree projection may be backfilled as listed for non-structures.

F. Water may be used to attain the proper moisture content in achieving compaction requirements. Prior to the placement of soil over the granular material all free water shall be drained from the excavation.

G. In areas where granular material is not acceptable for use as backfill, provide Controlled Density Fill (CDF) in accordance with ODOT Item 613, Low Strength Mortar Backfill.

5.7 Stockpiles

A. Stockpiles of excavated material and all construction material shall be of limited size and shall be neatly maintained or removed from the project site so as not to block existing drainage or impede pedestrian or vehicular traffic.

B. Excess excavated material stockpiled at the work site, and not be used for backfill or other restoration purposes, must be removed from the project area within 2 weeks of the initial disturbance.

C. Stockpiles shall not be permitted in the Ohio Department of Transportation right-of-way.

2 WORKING DAYS
BEFORE YOU DIG
CALL TOLL FREE 800-362-2764
OHIO UTILITIES PROTECTION SERVICE

Ohio Utilities Protection Service
Call 811 before you dig

NORTHWESTERN WATER & SEWER DISTRICT
12560 MIDDLETON PIKE, PO BOX 348
BOWLING GREEN, OH 43402
PHONE: (419) 354-9090 1-877-354-9090 TOLL FREE
AFTER HOURS EMERGENCY (419)-354-9001
www.nwwsd.org

SANITARY SEWER
GENERAL NOTES AND SPECIFICATIONS

DRAWN BY:			CHECKED BY:
#	DATE	BY	REVISION
1	06/13/14	GC	G.P. MODEL AND PART NUMBER
2	09/08/14	MD	GRAVITY SAN. SEWER PIPE MATERIAL
3	12/12/14	MD	REMOVED 4" TO 10" HDPE PIPE

NWSD 1 / 4

NORTHWESTERN THE DISTRICT WATER & SEWER

FORCE MAIN AND SEWER
GENERAL NOTES

NORTHWESTERN WATER AND SEWER DISTRICT,
WILLOWBEND PUMP STATION IMPROVEMENTS, SS-307

NO.	DATE	BY	REVISIONS AFTER ISSUED FOR BID
5			
4			
3			
2			
1			

Jones & Henry Engineers, Ltd.
Fluid thinking©.
www.JHeng.com

JOB NO. 796-7215.002

SCALE NONE

THIS LINE SCALES 1" WHEN PLOTTED TO NOTED SCALE

DESIGNED	DRAWN	CHECKED
TAB	BJD	TAB

STATUS: ISSUED FOR BID
DATE: AUGUST 2021

SHEET NO.
FM-0.1
18 OF 50

TOL-7215\02FM01-FORCE MAIN SEWER DETAILS\
2/11/2021 2:29 PM - SWILLIS
8/12/2021 2:44 PM

NORTHWESTERN WATER & SEWER DISTRICT
SANITARY SEWER GENERAL NOTES AND SPECIFICATIONS

6.0 INSTALLATION OF SANITARY PRESSURE PIPES

A. Pressure sewer pipes shall be installed in accordance with the District's requirements for water line pipe installation.

7.0 HORIZONTAL DIRECTIONAL DRILLING

7.1 General

A. Pipe to be installed by HDD shall use a surface launched steerable drill tool controlled from a mobile drilling frame that includes a field power unit, drilling fluid mixing system and mobile spoils extraction system.

B. The Contractor shall be responsible for any settlement, heaving, drilling fluid contamination or other damage caused to surface or underground features as a result of the HDD operation. The Contractor shall closely monitor the volume of drilling fluid used, pulling forces and the pullback operation to avoid damage to adjacent facilities or pipe being installed.

7.2 Procedure

A. PILOT HOLE: The pilot hole shall be drilled in accordance with the tolerance limits listed below. The Contractor shall clearly mark the alignment and depth of the pilot hole on the ground or with paint, lathe or flags as the drilling head advances.

B. REAMING: The drill hole shall be pre-reamed as necessary for the type of soil and ground conditions. The reaming diameter shall not exceed 1.5 times the diameter of the product pipe being installed.

C. PIPE INSTALLATION: The pipe shall be pulled into place in one continuous operation and properly supported and protected to prevent damage during installation. The Contractor shall carefully monitor the pullback operation to ensure the allowable strength of the pipe is not exceeded. Pipe connections shall be made after pipe has had adequate time to adjust to environmental conditions such as temperature.

7.3 Drilling Fluid

A. The Contractor shall utilize drilling fluid consisting of a bentonite, water and polymer solution to stabilize the hole, remove cuttings and lubricate the pipe. All drilling fluid mixtures shall meet the requirements of applicable environmental regulations. The pipe shall be cleaned of any drilling fluid that enters the pipe during the execution of the work.

B. The Contractor shall provide measures to contain the drilling fluid to the work area to prevent damage to adjacent facilities.

7.4 Tolerances

A. The pipe shall be installed to the specified tolerances as summarized below. Pipe installations that fall outside of these tolerances shall be re-drilled to achieve the required tolerances.

B. For Pressure Pipe the vertical elevation shall be within 0.50-feet of the plan elevation and the horizontal alignment shall be within 2-feet of the plan location unless otherwise specified. C.

C. For gravity sanitary sewers, the vertical location shall be within 0.10-feet of the plan location with slope not less than shown. The horizontal alignment shall be within 0.50-feet of the design plan location.

D. The pilot hole curve radius shall be no greater than 75% of the maximum bending radius of the pipe being installed.

E. The pilot hole shall be no closer than 3-feet from any right-of-way or easement boundary.

F. In the case that the pilot hole must be abandoned, the Contractor shall submit a plan for filling, grouting or securing the pilot for review by the District.

G. QUALITY CONTROL: The Contractor shall locate the pilot hole every 25-feet and maintain accurate record of the horizontal and vertical location of the pilot hole. The Contractor shall maintain drilling logs recording the following information: date, times, soil conditions, depth of bury and horizontal location referenced to stationing, centerline, R/W or permanent easement line. The Contractor shall pot hole excavate all existing utilities to be crossed by the proposed boring prior to commencing drilling operations. The District shall reserve the right to require more frequent pot holing or pilot hole excavation location checks.

8.0 SANITARY SEWER TESTING REQUIREMENTS

8.1 Testing Requirements

A. The Contractor shall furnish the necessary pumping equipment, pipe connections, taps, gauges, auxiliary water containers, bulkheads, plugs, and any other equipment required to perform pressure and leakage tests.

B. Leakage testing on gravity sanitary sewers shall not be performed until deflection testing has been successfully completed. If leakage testing is performed prior to deflection testing, the Contractor will be required to repeat the leakage testing of the sewer following deflection testing.

C. The Contractor may allow a subcontractor to perform the testing of facilities installed under this specification, but all testing must be performed with a representative of the Contractor and District present. The District representative shall reserve the right to require and witness the calibration of any equipment to be used for the test.

D. The District shall reserve the right to require additional testing of materials not specifically defined as required to determine conformance with these specifications.

8.2 Gravity Sewer Deflection Testing

A. Conduct deflection testing by pulling an approved deflection mandrel, having a diameter not less than 95% of the internal diameter of the pipe being tested. The Contractor shall provide a proving ring at the time of testing to verify that mandrel is within tolerance.

B. Deflection testing shall not be performed until a section of pipe has been installed, with final backfill in place for 30 days.

8.3 Gravity Sewer Leakage Testing

A. The air testing for PVC pipe shall be performed in accordance with ASTM F-1417 and the chart shown in these Specifications. The air testing for concrete pipe shall be performed in accordance with ASTM C-924.

B. Air tests shall be performed between two consecutive manholes following the placement of bedding around the pipe and backfill in the trench. Lateral sewer connections shall not be connected to the new sewer until all testing is complete unless otherwise approved by the District.

C. A well point shall be installed at the lowest manhole installed as part of the work to determine existing ground water elevation.

D. The air pressure during the test shall be **4.0** psi with an adjustment of 0.433 psi for each foot of groundwater above the crown of the pipe being tested. Internal pressure adjustments shall not exceed 5.0 psi to avoid over pressurizing the pipe joints.

E. Tests shall be conducted based on the diameter and length of the pipe being tested. The test shall be considered acceptable if the time elapsed for the 1 psi drop is greater than or equal to the allowable time.

F. The leakage exfiltration or infiltration shall not exceed 100 gallons per inch of pipe diameter per mile per day (0.02m^3/mm of pipe dia.km/day) for any section of the system. An exfiltration or infiltration test shall be performed with a minimum positive head of 2 feet (600 mm).

8.4 Pressure Pipe Testing

A. Pressure pipes shall be hydrostatically tested in accordance with procedures outlined in AWWA C600 and AWWA C605. The Contractor shall remove all air from the section of pressure pipe. The new pressure pipe shall remain isolated from adjacent mains during the hydrostatic testing.

B. Pressure pipes shall be tested at the greater of 100 psi or 250 percent of the operating head by pumping clean water containing 10 ppm chlorine from a cleaned and sterilized container through a 1-inch corporation stop installed on the pressure pipe.

C. After 18-hours, the pressure pipe shall be maintained at the test pressure for 6-hours. At the end of the 6-hour period, the water shall be measured and the loss by leakage shall not exceed that as determined by the following formula:

$$L = (S * D * \sqrt{P}) / 148{,}800$$

Where:
L = Quantity of make water in gallons per hour
S = Length of pipe section being tested in feet
D = diameter of pipe, in
P = average test pressure in pounds per square inch (gauge)

D. Pressure testing of each side of the intermediate valves shall be performed by shutting each valve and exhausting the pressure on one side and then applying the test pressure on the opposite side of the valve. This procedure shall be repeated for each intermediate valve.

E. All visible leaks shall be repaired, regardless of the amount of leakage.

8.4 Manhole Leakage Testing:

A. Manhole leakage testing shall be performed by drawing a vacuum of 10-inches of mercury into the manhole using equipment approved to conduct such testing in accordance with ASTM C-1244. With the vacuum pump turned off and all valves closed, the time for the vacuum to drop from 10-inches to 9 inches shall be recorded. The vacuum test shall be considered acceptable if the elapsed time is equal to or greater than that specified in the chart shown in these Specifications. The test pressure may be adjusted to account for the depth of groundwater above the invert of the manhole as shown in the chart.

B. The Contractor shall plug and brace all pipes entering the manhole and seal any cracks, or holes with a non-shrink grout to prevent air being drawing into the manhole.

C. The use of detergents, soaps, or other similar agents will not be permitted to be applied to any of the internal joints of the manhole before testing of the manhole. The contractor will be permitted to apply soap, detergent, or a similar agent to the joints after a failed test to determine the location of the leak.

8.5 Repairs

A. Any section of sewer failing to meet the testing requirements outlined in this section shall be remedied by presenting a plan for review by the District.

B. Mainline and lateral repairs are to be made using solid pipe couplers. The use of Fernco type flexible couplings for repair sections shall not be acceptable.

9.0 SITE WORK

A. All areas shall be returned to the grade and condition existing prior to the work within 30 days of disturbance of the area unless approved otherwise by the District. This shall include the repair or replacement of pavement surfaces.

9.1 Seeding, Mulching, and Topsoil

A. All areas disturbed by construction and not paved with some other material shall be seeded, mulched, and fertilized according to ODOT Item 659.

B. Weather Restrictions: All disturbed areas shall be permanently restored within 30 days of the initial disturbance between March 15 and October 15. Disturbed areas shall be temporarily seeded between October 16 and March 14 and permanently restored as soon as weather permits. Hydro-seeding or Broadcasting technique's may be used from March 15th to May 31st. From June 1st to October 15th, the Broadcasting technique shall be used.

C. Topsoil: The topsoil depth shall be a minimum of 4-inches thickness and in no case shall the less than existing prior to the work. Topsoil areas shall be prepared in accordance with ODOT Item 653 or ODOT Item 652. Topsoil shall be raked free of rocks and clods prior to seeding. All topsoil shall be provided and tested per ODOT Item 659.

D. Seed Mixtures: Prior to seeding, the District shall identify the required seed mixtures per ODOT Item 659. Lawns of quality superior to the lawn seed mixture specified by ODOT Item 659 shall be identified by the Contractor and the Contractor shall submit a seed mixture similar to the lawn to the District for review. Any additional compensation required to provide the superior seed mixtures shall be limited to the difference in material cost between the ODOT Item 659 lawn seed mixture and the approved lawn seed mixture. An invoice is required to approve the cost adjustment.

E. Temporary seed mixtures shall be submitted for review by the District.

F. Hydro-seeding Technique: Apply starter fertilizer per ODOT 659. The seeded slurry shall be applied with a hydraulic seeder at a rate of 3 pounds per 1,000 square feet in two intersecting directions. Hydro-mulch with a tackifier shall consist of 2/3 wood and 1/3 paper fibers and shall be applied to a minimum thickness of 1/8-inch.

G. Broadcast Technique: Apply starter fertilizer per ODOT 659. Apply seed at a rate of 6 lbs per 1000 sq. ft. evenly in two intersecting direction's. Rake seed in lightly. Apply straw mulch evenly over all seeded areas and immediately apply a tackifier per ODOT 659.

H. Maintenance: The Contractor shall repair and reseed any areas that settle after the permanent seeding is completed for the warranty time period specified. The Contractor shall perform any Repair Seeding and Mulching as specified under Item 659. The Contractor shall be responsible for reseeding areas as necessary at time intervals appropriate for the ground and weather conditions until a dense stand of grass is obtained. Seeded areas shall be maintained and watered by the Contractor in accordance with ODOT Item 659.

9.2 Trees and Bushes

A. Trees and bushes shown on the plan be removed as part of the work, shall be removed and disposed of by the Contractor in accordance with ODOT Item 201.

B. The District's permission shall be obtained prior to the removal of any tree or bush not marked for removal on the plan.

C. Other trees, tree limbs and bushes located such that they made be damaged during the work, shall be properly trimmed and shaped. All exposed surfaces in excess of one inch diameter shall be immediately painted with an approved pruning compound.

D. Trees and bushes, not approved for removal damaged by the Contractor shall be replaced by the Contractor.

10.0 PAVEMENTS, SIDEWALKS, DRIVEWAYS

10.1 General

A. The Contractor shall obtain all permits and approvals required to perform the necessary pavement cuts prior to commencing work on the project.

B. All pavement and sidewalk repairs shall be performed in accordance with the requirements of the ODOT Construction Materials Specifications and in accordance with the requirements of local agency having jurisdiction over the roadway.

10.2 Pavement Removal

A. Pavement removal shall be performed in accordance with ODOT Item 202.

B. All edges of existing pavement shall be saw-cut neatly and perpendicular to the surface.

10.3 Concrete Pavement Replacement

A. Concrete pavement replacement shall be performed in accordance with ODOT Item 255 and 451.

B. All concrete materials, reinforcing steel and required dowel placements shall be in accordance with ODOT standard plans or approved by the local agency having jurisdiction over the roadway.

10.4 Asphalt Pavement Replacement

A. Asphalt pavement repairs shall be provided in accordance with the requirements of the local agency having jurisdiction over the roadway. At a minimum the pavement repair thicknesses shall match the existing cross section. The asphalt pavement repairs shall be as shown in these Specifications.

B. All cold joints shall be sealed in accordance with ODOT Item 409.

C. The repaired pavement shall match the elevation, profile grade, cross slope, width, shoulder, edge design and pavement striping of the pavement section prior to the work.

10.5 Temporary Pavement

A. No asphalt concrete pavement shall be placed before May 1 or after October 31, unless otherwise approved by the District. Should pavement replacement not be completed within these dates the Contractor shall provide a temporary wearing course meeting the requirements of ODOT Item 446.

B. The Contractor shall replace temporary pavements with permanent pavement as specified.

10.6 Sidewalks

A. Existing concrete, slate or brick sidewalk to be removed as part of the work or are damaged during the execution of the work shall be replaced. Slate or brick material to be removed shall be salvaged for the property owner unless otherwise specified.

B. New concrete sidewalks shall match the original sidewalk width, grade and slope. All sidewalks shall be a minimum of 4-feet wide. Service walks leading from private properties shall be installed to match the original width, grades and slopes. New sidewalks shall be a minimum 4 -inches thick, except at driveways where they shall be 6-inches or 8-inches thick and shall be laid to the established sidewalk grade and placed on 4-inches of compacted sand fill or ODOT Item 304.

C. All concrete used for sidewalks shall be a 4000 psi air-entrained mix.

D. The concrete shall be carefully spaded into place and struck even with the top of the forms after which it shall be wood floated to a level skid-resistant broom surface.

E. Provide ½-inch mastic expansion joints at intervals of 25-feet and at junctions with other walls or structures. Sidewalks other than concrete or brick shall be classified as pavement and shall be replaced as previously specified for the appropriate type of pavement.

10.7 State Highway Roadway Crossings

A. All crossings of State Highways shall be installed by boring methods unless otherwise approved by ODOT District 2.

B. Where open cutting of State Highways is approved by ODOT District 2 within municipal corporate boundaries, the work shall be performed in accordance with the requirements of these Specifications.

11.0 MISCELLANEOUS STRUCTURES AND FACILITIES

11.1 Existing Structures and Facilities

A. The Contractor shall remove and replace all existing facilities required and shown to complete the work as shown.

11.2 Existing Storm Sewers

A. All existing storm sewers, subsurface drainage systems or field tiles damaged or interfered with during construction shall be replaced with new pipe matching the existing storm sewer and as directed by the entity having jurisdiction over the storm sewer. Removed pipe shall not be reused unless approved by the District and entity having jurisdiction over the storm sewer. Storm sewer shall be constructed in accordance with ODOT 603.

B. The replaced pipe shall be installed with proper bedding and backfill and shall be installed to match the grade and size of the existing storm sewer.

C. Fernco type adapters or approved equal shall be used at all joints connecting new storm sewer pipe to the existing storm sewer pipe.

12.0 MAINTENANCE OF TRAFFIC

A. The Contractor shall maintain traffic per ODOT Item 614 and to the satisfaction of the entity having jurisdiction over the roadway.

B. All work zone traffic control shall conform to the requirements of the Ohio Manual of Uniform Traffic Control Devices. The design and operation of the all work zone traffic control shall be the responsibility of the Contractor.

C. All plans for road closures, lane restrictions or reductions shall be submitted a minimum of 2 weeks ahead of the expected work for review by the District and the local entity having jurisdiction over the roadway. It shall be the Contractor's responsibility to determine if more than 2 weeks are needed for the local entity's review.

13.0 SHOP DRAWINGS AND SUBMITTALS

13.1 General

A. The Contractor shall submit 5 copies all shop drawings and submittals to the District showing all materials or equipment that are proposed or required for the work. Shop drawings and submittals shall be provided a minimum of 10 days prior to the commencement of construction.

B. The Contractor shall provide a construction schedule indicating major project milestones. The Contractor shall update this schedule during the work to reflect changes in the project schedule.

C. Shop drawings shall be drawn to scale and include all field measurements, calculations, certifications, material and equipment specifications as well as any other information necessary for the District's review.

D. An approved shop drawing does not relieve the Contractor from providing a complete working system as described in the Contract Documents.

E. Material or equipment installed without an approved shop drawing is done at the Contractor's sole risk and is subject to removal at no additional cost to the District, if the District determines the material or equipment is unacceptable or improperly installed.

13.2 Video Record of Existing Site Conditions

A. The Contractor shall provide a digitally recorded video record showing the site conditions of the construction area to the District a minimum or 5 days prior to the commencement of any work on the site. The preconstruction video record shall be of sufficient detail to describe all existing site features and conditions including, but not limited to; roadway, sidewalk and driveway pavement, curbs, gutters, ditches, bridges, culverts, headwalls, landscaping, trees, signs, utility poles, mailboxes, street lights, catch basins, manholes, valve boxes, fire hydrants, fences and any other features that may be affected by the work. Buildings shall be located by street address.

B. The Contractor shall utilize a professional video recording service specializing in the preparation of municipal project preconstruction video records. When filming from a wheeled vehicle, the distance from the lens to the surface shall not be less than 12 feet to insure adequate perspective.

C. The contractor shall provide two (2) copies of the video record in DVD format to the District prior to the commencement of construction. All discs and cases provided to the District shall bear the following information; NAME OF PROJECT, DISTRICT PROJECT NO (SS-XX), NAME OF CONTRACTOR, NAME OF VIDEO RECORDING SERVICE, DATE OF RECORDING.

D. The video record shall have a continuously, running time digital stamp, indicating the date, time (hh:mm:ss), direction of travel and stationing (xx+xx). The video record shall consist of a video track and an audio track. The audio track shall be recorded by the camera operator describing the features being recorded.

E. Video recording of existing site conditions shall be performed in the presence of a representative of the District.

13.3 As-Built Plans

A. The Contractor shall maintain as-built records of all construction work performed, carefully noting any changes in the design plans. These as-built plans shall be submitted to the District following the completion of the work.

13.4 Sanitary Sewer Cleaning and Television Inspection

A. The Contractor shall clean and televise all sections of the new gravity sewers to the satisfaction of the District. Cleaning and television inspection shall be performed after successful deflection and leakage testing.

B. CLEANING - Prior to televising sanitary sewer facilities, the Contractor shall utilize high velocity water jet equipment to remove all debris from the sanitary sewer facilities. The Contractor shall properly dispose of any debris removed from the sanitary sewer. Water for the first cleaning of the sanitary sewer shall be provided by the District. If additional cleaning is required following the television inspection, water required for additional cleaning shall be provided by the District at the Contractor's cost.

C. TELEVISION INSPECTION - The Contractor shall utilize CCTV equipment to visually inspect the condition of the sanitary sewers with a picture quality acceptable to the District. The Contractor shall re-inspect the sanitary sewer if the inspection is determined to be unsatisfactory. Lighting for television inspection shall be provided by a camera mounted lamp capable of lighting the entire inside circumference of the sanitary sewer pipe.

D. The camera shall be moved through the line in either direction at a uniform rate not to exceed three feet per second and stopping when necessary to insure proper documentation of the sewer's condition and lateral sewer locations. Equipment used to move the camera through the sewer shall not interfere with the camera view.

E. CAMERA - The television camera shall be specifically designed and constructed for sanitary sewer television inspection. The camera shall be capable of operating in 100% humidity conditions and of viewing the entire inside circumference the sanitary sewer pipe. Lateral connections shall be inspected by looking up the lateral from the sewer main. The camera shall be self-propelled or mounted on adjustable skids. The camera view shall be transmitted to an above grade minimum 17-inch monitor.

F. INSPECTION LOGS - The Contractor shall submit a typed inspection log clearly indicating date, time, street, sanitary sewer number as well as the location of any significant features such as; damaged pipe, pipe bellies, infiltration points, lateral locations or any other unusual conditions.

G. VIDEO RECORD - The Contractor shall submit 2 copies of the video record in DVD format to the District for review. The video record shall have both audio and video tracks describing and depicting pertinent features viewed during the inspection. The video track shall include the following; street, sanitary sewer number and section, date and current distance along reach complete with descriptive printed labels on each container. The audio track shall include the date and time of inspection, sanitary sewer number and section, verbal description of pipe size and type, description of any defects or significant features.

H. The District shall reserve the right to require television inspection on any public or private sanitary sewer installation at the expense of the installing contractor or the owner of a private sewer.

I. The District shall reserve to right to require repairs to any defects noted during the television inspection. This shall be the case even if the sewer passes deflection, air testing or any other required testing prior to video inspection.

2 WORKING DAYS
BEFORE YOU DIG
CALL TOLL FREE 800-362-2764
OHIO UTILITIES PROTECTION SERVICE

Ohio Utilities Protection Service
Call 811 before you dig

NORTHWESTERN WATER & SEWER DISTRICT
12560 MIDDLETON PIKE, PO BOX 348
BOWLING GREEN, OH 43402
PHONE: (419) 354-9090 1-877-354-9090 TOLL FREE
AFTER HOURS EMERGENCY (419)-354-9001
www.nwwsd.org

SANITARY SEWER
GENERAL NOTES AND SPECIFICATIONS

#	DATE	BY	REVISION
1	02/26/13	TB	CONTENT REVISION
2	03/27/13	TB	TRENCH DETAIL
3	04/29/13	MD	ADDED 8.3, NOTE F

DRAWN BY:
CHECKED BY:

NWSD 2 / 4

NORTHWESTERN THE DISTRICT WATER & SEWER

FORCE MAIN AND SEWER
GENERAL NOTES

NORTHWESTERN WATER AND SEWER DISTRICT,
WILLOWBEND PUMP STATION IMPROVEMENTS, SS-307

NO.	DATE	REVISIONS AFTER ISSUED FOR BID	BY
5			
4			
3			
2			
1			

Jones & Henry Engineers, Ltd.
Fluid thinking©.
www.JHeng.com

JOB NO. 796-7215.002
SCALE NONE
THIS LINE SCALES 1" WHEN PLOTTED TO NOTED SCALE

DESIGNED	DRAWN	CHECKED
TAB	BJD	TAB

STATUS: ISSUED FOR BID
DATE: AUGUST 2021
SHEET NO.
FM-0.2
19 OF 50

TOL-7215002FM02-FORCE MAIN SEWER DETAILS2
JT 2/20/2021 2:04 - SWILLIS
8/12/2021 2:44 PM

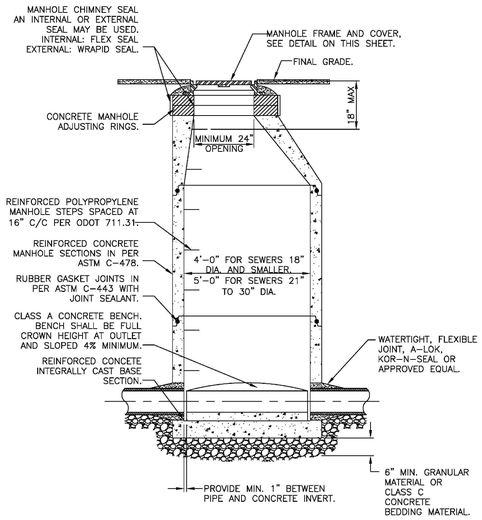

ECCENTRIC MANHOLE FOR SEWERS 30" DIAMETER AND SMALLER

NOTES:

1. MANHOLE DETAILS FOR SEWERS LARGER THAN 30" DIAMETER SHALL BE PROVIDED AS NEEDED.
2. LIFTING HOLES OR EYES SHALL BE FILLED WITH NON-SHRINK GROUT MATERIAL.
3. ROTATE MANHOLE CONE SECTION TO PLACE THE STEPS TOWARD THE NEAREST EDGE OF PAVEMENT.
4. THE CONTRACTOR SHALL PROVIDE LARGER DIAMETER MANHOLES AS SPECIFIED AND REQUIRED FOR MANHOLES WITH MULTIPLE SEWER CONNECTIONS, ACUTE PIPE ANGLES OR LARGER DIAMETER SEWERS.
5. MANHOLE INVERTS SHALL PROVIDE A SMOOTH FLOW TRANSITION AT ALL CHANGE IN FLOW DIRECTION. LARGER MANHOLES SHALL BE PROVIDED AS NECESSARY TO MEET THIS REQUIREMENT.

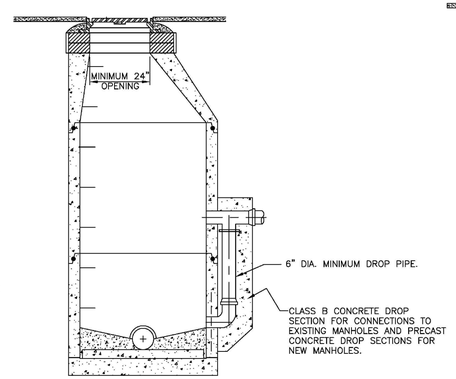

OUTSIDE DROP MANHOLE DETAIL

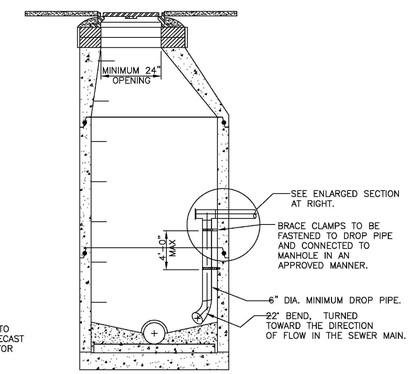

INSIDE DROP MANHOLE DETAILS

NOTES:

1. THE INSIDE DROP MUST BE A COMFORTABLE DISTANCE FROM THE MANHOLE STEPS.

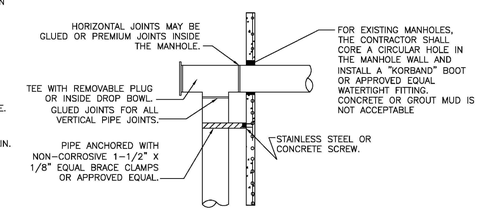

ENLARGED SECTION

NOT TO SCALE

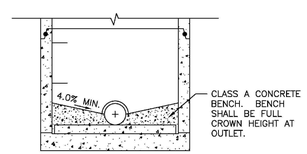

MANHOLE BENCH DETAIL

NOT TO SCALE

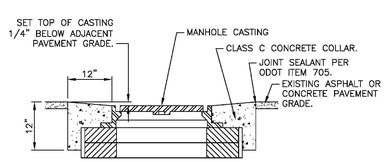

CONCRETE COLLAR DETAIL

NOT TO SCALE

NOTES:

1. THE CONCRETE COLLAR SHALL BE CONSTRUCTED USING FAST SET CONCRETE.
2. THE CONCRETE COLLAR SHALL NOT BE OPENED TO TRAFFIC UNTIL THE CONCRETE HAS CURED FOR 24-HOURS.

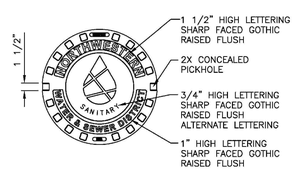

MANHOLE COVER DETAIL

NOT TO SCALE

NOTES:

1. DISTRICT SANITARY SEWER COVER AND FRAME SHALL BE EJIW 1020A OR NEENAH 1772 MANHOLE FRAME AND COVER AS DETAILED ABOVE.
2. PRIVATE SANITARY SEWER MANHOLES COVERS SHALL BE MARKED "SANITARY."

MANHOLE VACUUM TESTING CHART

MINIMUM TIME FOR 1-IN HG VACUUM READING DROP (ASTM C-1244)

MANHOLE DEPTH (FT)	MIN. TIME (SEC)	
	48" DIA.	60" DIA.
8	20	26
10	25	33
12	30	39
14	35	46
16	40	52
18	45	59
20	50	65
22	55	72
24	59	78
26	64	85
28	69	91
30	74	98

MANHOLE VACUUM TESTING ADJUSTMENT FOR HYDROSTATIC HEAD

ADJUSTMENT OF INITIAL VACUUM READING TO ACCOUNT FOR HYDROSTATIC HEAD ABOVE THE INVERT OF THE MANHOLE

HYDROSTATIC HEAD (FT)	INITIAL TESTING VACUUM (IN HG)
≤12'	10
13	9
14	8
15	7
16	6
17	5
18	4
19	3
20	2
21	1
22	*

* AT 22-FEET BELOW THE GROUNDWATER TABLE, THE INVERT OF THE MANHOLE IS AT 9.5 PSI.

2 WORKING DAYS BEFORE YOU DIG
CALL TOLL FREE 800-362-2764
OHIO UTILITIES PROTECTION SERVICE

Ohio Utilities Protection Service Call 811 before you dig

Disclaimer: The content of this document is intended for illustrative purposes only and is not complete. The Northwestern Water and Sewer District expressly disclaims any and all liability for any and all reliance thereon. All uses, other than personally, are strictly prohibited.

NORTHWESTERN WATER & SEWER DISTRICT
12560 MIDDLETON PIKE, PO BOX 348
BOWLING GREEN, OH 43402
PHONE: (419) 354-9090 1-877-354-9090 TOLL FREE
AFTER HOURS EMERGENCY (419)-354-9001
www.nwwsd.org

NORTHWESTERN THE DISTRICT WATER & SEWER

SANITARY SEWER
MANHOLE DETAILS

DRAWN BY: CHECKED BY:

#	DATE	BY	REVISION
	02/25/13	TB	CONTENT REVISION
	10/24/19	MD	MANHOLE COVER DETAIL
	1/24/20	MD	MINIMUM MH OPENING

NO. DATE REVISIONS AFTER ISSUED FOR BID BY

NWSD 3 / 4

FORCE MAIN AND SEWER DETAILS
NORTHWESTERN WATER AND SEWER DISTRICT,
WILLOWBEND PUMP STATION IMPROVEMENTS, SS-307

Jones & Henry Engineers, Ltd.
Fluid thinking©.
www.JHeng.com

JOB NO. 796-7215.002
SCALE AS NOTED
THIS LINE SCALES 1" WHEN PLOTTED TO NOTED SCALE

DESIGNED	DRAWN	CHECKED
TAB	BJD	TAB

STATUS: ISSUED FOR BID
DATE: AUGUST 2021
SHEET NO.
FM-0.3
20 OF 50

TOL-7215002FM03-FORCE MAIN SEWER DETAILS3
7/09/2021 2:39 PM - SWILLIS
8/12/2021 2:45 PM

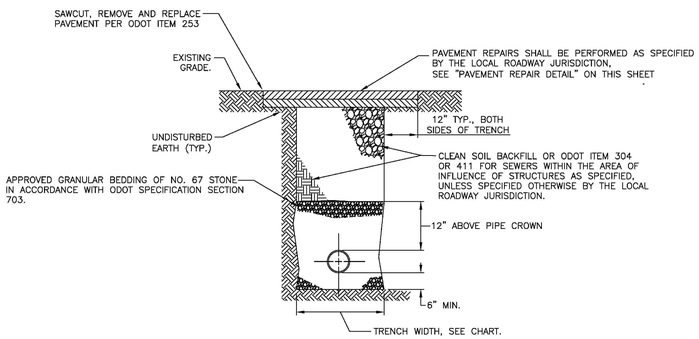

TRENCH AND BEDDING DETAIL

NOT TO SCALE

STATE HIGHWAY TRENCH AND BEDDING NOTES FOR WORK IN ODOT RIGHT OF WAY

1. BEDDING MATERIAL SHALL BE EXTENDED 6–INCHES ABOVE THE CROWN OF THE PIPE.
2. BACKFILLING ABOVE THE BEDDING MATERIAL AND BELOW THE PAVEMENT SECTION SHAL BE ODOT 613, LOW STRENGH MORTAR BACKFILL.
3. PAVEMENT REPAIRS SHALL BE PERFORMED IN ACCORDANCE WITH THE "ODOT PAVEMENT REPAIR DETAIL."

SIZE	MINIMUM TRENCH WITDH
6"	2'–0"
8"	2'–1"
10"	2'–3"
12"	2'–5"
15"	2'–8"
18"	3'–0"
21"	3'–4"
24"	3'–8"
27"	3'–11"
30"	4'–4"
36"	5'–0"

TRENCH WIDTH SCHEDULE

NOTES:

1. TABLE IS FOR ASTM D–3034, SDR 35 PIPE FOR 6"–15" AND ASTM F–679 WALL FOR OTHER FLEXIBLE PIPES, MINIMUM TRENCH WITH SHALL MEET MANUFACTURER'S REQUIREMENTS.
2. MAXIMUM TRENCH WIDTH SHALL BE NO MORE THAN TWO (2') FEET PLUS THE PIPE DIAMETER.
3. WHERE APPLICABLE AND NOT OTHERWISE STATED IN THE SPECIFICATIONS, THE MINIMUM TRENCH WIDTH SHOWN ABOVE SHALL BE THE PAY WIDTH FOR TRENCHING IN ROCK.

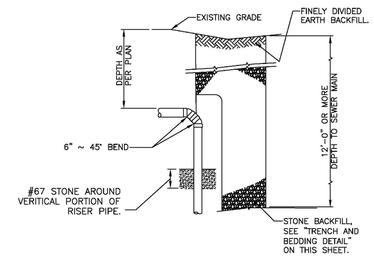

6" RISER WITH VERTICAL TRENCH WALLS

NOT TO SCALE

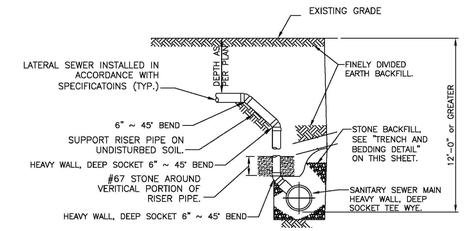

6" SERVICE CONNECTION FOR SEWER MAIN GREATER THAN 12'–0" DEEP

NOT TO SCALE

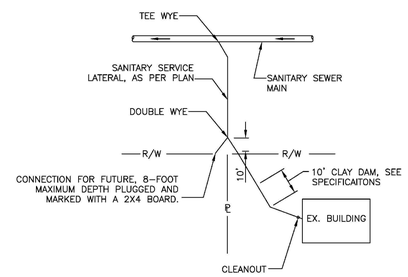

TYPICAL PLAN OF SANITARY SEWER LATERALS

NOT TO SCALE

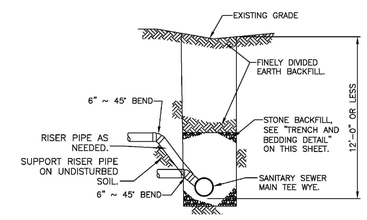

6" SERVICE CONNECTION FOR SEWER MAIN LESS THAN 12'–0" DEEP

NOT TO SCALE

GRAVITY SANITARY SERVICE CONNECTION DETAILS

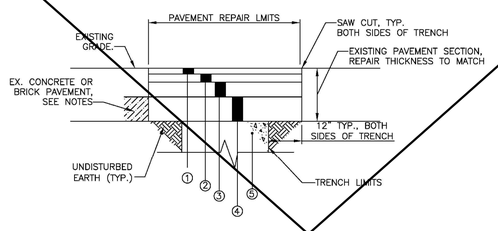

① 1 1/4" ODOT ITEM 448 ASPHALT CONCRETE SURFACE COURSE, TYPE 1, PG 64–22.
② 1 3/4" ODOT ITEM 448 ASPHALT CONCRETE INTERMEDIATE COURSE, TYPE 2, PG 64–22.
③ 6" ODOT ITEM 301 ASPHALT CONCRETE BASE COURSE, PG 64–22. (2 LIFTS)*
④ 12" ODOT ITEM 304 AGGREGATE BASE.
⑤ ODOT ITEM 613 LOW STRENGTH MORTAR BACKFILL.*

PAVEMENT REPAIR DETAIL

NOT TO SCALE

NOTES

1. THE THICKNESS OF THE PAVEMENT REPAIR SECTION SHALL NOT BE LESS THAN THE EXISTING PAVEMENT SECTION INCLUDING AGGREGATE BASE MATERIAL.
2. CONCRETE OR BRICK BASE MATERIAL SHALL BE REPLACED WITH A MINIMUM OF 8–INCHES OF ODOT ITEM 452, NON–REINFORCED CONCRETE PAVEMENT. THE THICKNESS OF THE CONCRETE BASE REPAIR SHALL NOT BE LESS THAT THE EXISTING BASE MATERIAL. SEE ODOT BP–2.1 AND ODOT BP–2.2.

* ODOT PAVEMENT ONLY

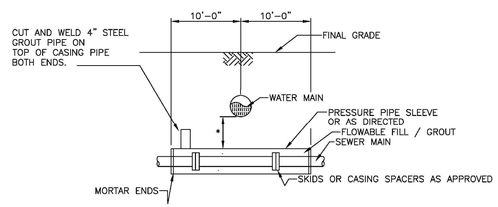

ENCASEMENT DETAIL

NOT TO SCALE

NOTES:

1. WHERE "*" IS LESS THAN 18" A PRESSURE PIPE SLEEVE ON THE SEWER LINE IS REQUIRED. WHEN DIVERTING THE WATER MAIN OR PROVIDING SLEEVING, ONE LENGTH OF WATER PIPE IS TO BE LOCATED SO THAT BOTH JOINTS WILL BE AS FAR FROM THE SEWER AS POSSIBLE.
2. ALTERNATIVELY, THE SANITARY SEWER MAY BE CONSTRUCTED USING A PIPE MATERIAL EQUAL TO THE WATERMAIN BEING CROSSED.

PVC PIPE AIR TEST CHART

MINIMUM TIME FOR A 1.0 PSI PRESSURE DROP FOR SIZE AND LENGTH OF PIPE INDICATED (UNI–6–98)

PIPE DIAMTER (IN)	MINIMUM TIME (MIN:SEC)	TIME FOR LONGER SECTION (SEC)	100	150	200	250	300	350	400	450	500
6	5:40	0.854 L	5:40	5:40	5:40	5:40					
8	7:34	1.520 L	7:34	7:34	7:34	7:34	7:36	8:52	10:08	11:24	12:40
10	9:26	2.374 L	9:26	9:26	9:26	9:53	11:52	13:51	15:49	17:48	19:47
12	11:20	3.418 L	11:20	11:20	11:24	14:15	17:05	19:56	22:47	25:38	28:29
15	14:10	5.342 L	14:10	14:10	17:48	22:15	26:42	31:09	35:36	40:04	44:31
18	17:00	7.692 L	17:00	19:13	25:38	32:03	38:27	44:52	51:16	57:41	64:06
21	19:50	10.470 L	19:50	26:10	34:54	43:37	52:21	61:00	69:48	78:31	87:15
24	22:40	13.674 L	22:47	34:11	45:34	56:58	68:22	79:46	91:10	102:33	113:57
27	25:30	17.306 L	28:51	43:16	57:41	72:07	86:32	100:57	115:22	129:48	144:13
30	28:20	21.366 L	35:37	53:25	71:13	89:02	106:50	124:38	142:26	160:15	178:03

2 WORKING DAYS BEFORE YOU DIG
CALL TOLL FREE 800–362–2764
OHIO UTILITIES PROTECTION SERVICE

Ohio Utilities Protection Service Call 811 before you dig

Disclaimer: The content of this document is intended for illustrative purposes only and is not complete. The Northwestern Water and Sewer District expressly disclaims any and all liability for any and all reliance thereon. All uses, other than personally, are strictly prohibited.

NORTHWESTERN WATER & SEWER DISTRICT
12560 MIDDLETON PIKE, PO BOX 348
BOWLING GREEN, OH 43402
PHONE: (419) 354–9090 1–877–354–9090 TOLL FREE
AFTER HOURS EMERGENCY (419)–354–9001
www.nwwsd.org

NORTHWESTERN THE DISTRICT WATER & SEWER

FORCE MAIN AND SEWER DETAILS

NORTHWESTERN WATER AND SEWER DISTRICT,
WILLOWBEND PUMP STATION IMPROVEMENTS, SS-307

SANITARY SEWER
GRAVITY SEWER DETAILS

NO.	DATE	REVISIONS AFTER ISSUED FOR BID	BY
1	02/25/13	CONTENT REVISION	TB
2	03/27/13	TRENCH DETAIL	TB
3	06/26/17	TRENCH WIDTH NOTES	MD

DRAWN BY: BY
CHECKED BY:

Jones & Henry Engineers, Ltd.
Fluid thinking©.
www.JHeng.com

JOB NO. 796-7215.002
SCALE AS NOTED
THIS LINE SCALES 1" WHEN PLOTTED TO NOTED SCALE

DESIGNED	DRAWN	CHECKED
TAB	BJD	TAB

STATUS: ISSUED FOR BID
DATE: AUGUST 2021
SHEET NO.
FM-0.4
21 OF 50

NWSD 4 / 4

TOL-7215002FM04-FORCE MAIN SEWER DETAILS4
2/10/2021 2:44 PM - SWILLIS
8/12/2021 2:45 PM

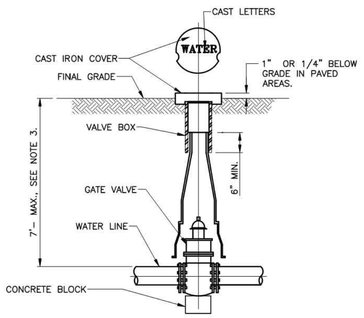

GATE VALVE DETAIL FOR 10" AND SMALLER WATER MAINS

NOT TO SCALE

NOTES:

1. VALVES WITH THE OPERATING NUT GREATER THAN 5–FEET BELOW GRADE SHALL BE PROVIDED WITH A VALVE EXTENSION.

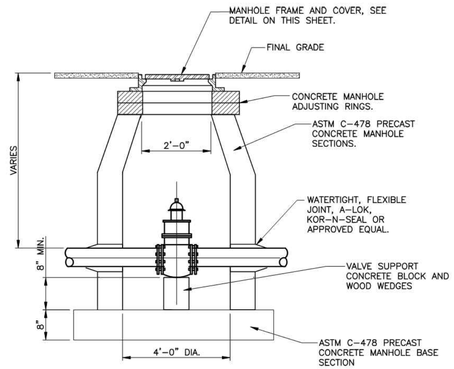

GATE VALVE IN MANHOLE DETAIL FOR 12" WATER MAINS

NOT TO SCALE

NOTES:

1. PROVIDE MANHOLES ON WATER MAINS 12" AND LARGER OR FOR VALVES LOCATED IN PAVEMENT IN ACCORDANCE WITH THE SPECIFICATIONS.

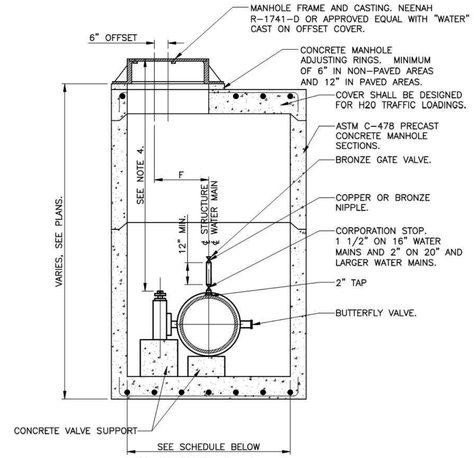

SECTION A–A

NOT TO SCALE

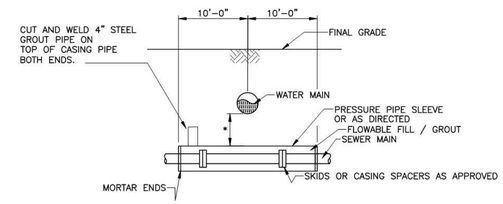

ENCASEMENT DETAIL

NOT TO SCALE

NOTES:

1. WHERE "*" IS LESS THAN 18" A PRESSURE PIPE SLEEVE ON THE SEWER LINE IS REQUIRED. WHEN DIVERTING THE WATER MAIN OR PROVIDING SLEEVING, ONE LENGTH OF WATER PIPE IS TO BE LOCATED SO THAT BOTH JOINTS WILL BE AS FAR FROM THE SEWER AS POSSIBLE.
2. ALTERNATIVELY, THE SANITARY SEWER MAY BE CONSTURCTED USING A PIPE MATERIAL EQUAL TO THE WATERMAIN BEING CROSSED.

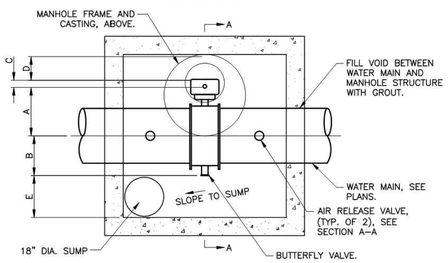

SQUARE MANHOLE PLAN

NOT TO SCALE

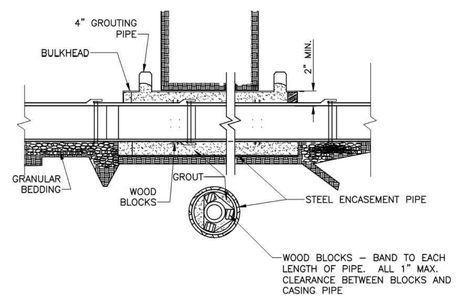

SANITARY SEWER AND WATER LINE BORING DETAIL

NOT TO SCALE

NOTES:

1. CASING PIPES FOR ROADWAY AND RAILROAD BORES SHALL BE PROVIDED IN ACCORDANCE WITH APPLICABLE RAILROAD AND OHIO DEPARTMENT OF TRANSPORTATION SPECIFICATIONS AND DETAILS.

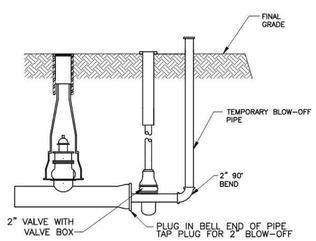

STANDARD DETAIL FOR DEAD END WITH 2" BLOW–OFF

NOT TO SCALE

WL–#	VALVE OPENING DIRECTION
WL–100 AREA	CLOCKWISE
WL–6100 AREA	CLOCKWISE
WL–7100 AREA	CLOCKWISE
WL–200 AREA	CLOCKWISE
WL–4000 AREA	CLOCKWISE
WL–5000 AREA	CLOCKWISE
ALL OTHERS	COUNTERCLOCKWISE

VALVE SCHEDULE

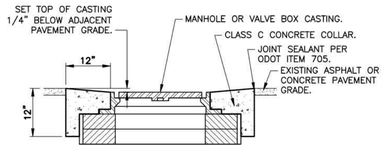

CONCRETE COLLAR DETAIL

NOT TO SCALE

NOTES:

1. THE CONCRETE COLLAR SHALL BE CONSTRUCTED USING FAST SET CONCRETE.
2. THE CONCRETE COLLAR SHALL NOT BE OPENED TO TRAFFIC UNTIL THE CONCRETE HAS CURED FOR 24–HOURS.

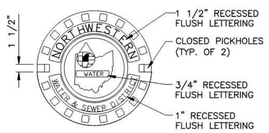

MANHOLE COVER DETAIL

NOT TO SCALE

NOTES:

1. DISTRICT WATER MANHOLE COVER AND FRAME SHALL BE EJIW 1020A OR NEENAH 1772 MANHOLE FRAME AND COVER AS DETAILED ABOVE.
2. PRIVATE WATER MANHOLES COVERS SHALL BE MARKED "WATER".

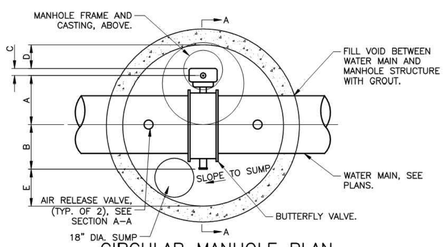

CIRCULAR MANHOLE PLAN

NOT TO SCALE

WATER MAIN DIAMETER (IN.)	MH SIZE (IN.)	MH SHAPE	MIN. WALL THICKNESS (IN.)	A (IN.)	B (IN.)	C (IN.)	D (IN.)	E (IN.)	F (IN.)
16	60	CIRCULAR	6	16	14.5	3	11	15.5	17
20	72	SQUARE	8	19	17	3.5	13.5	19	23
24	72	SQUARE	8	21.5	18.5	4	10.5	17.5	23
30	78	SQUARE	8	25	24.5	4	10	14.5	26
36	90	SQUARE	8	29	28	4	12	17	32

BUTTERFLY VALVE MANHOLE SCHEDULE

BUTTERFLY VALVE IN MANHOLE FOR 16" WATER MAINS AND LARGER

NOTES:

1. VALVES WITH THE OPERATING NUT GREATER THAN 7–FEET BELOW GRADE SHALL BE PROVIDED WITH A VALVE STEM EXTENSION AND STEM GUIDES.

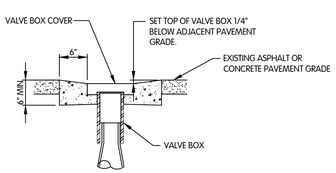

VALVE BOX CONCRETE COLLAR DETAIL

NTS

NOTES:

1. CONCRETE COLLARS SHALL BE A MINIMUM OF 6" THICK, BUT MATCH EXISTING PAVEMENT IF IT'S THICKER.

Disclaimer: The content of this document is intended for illustrative purposes only and is not complete. The Northwestern Water and Sewer District expressly disclaims any and all liability for any and all reliance thereon. All uses, other than personally, are strictly prohibited.

2 WORKING DAYS BEFORE YOU DIG CALL TOLL FREE 800–362–2764 OHIO UTILITIES PROTECTION SERVICE

Ohio Utilities Protection Service Call 811 before you dig

NORTHWESTERN WATER & SEWER DISTRICT
12560 MIDDLETON PIKE, PO BOX 348
BOWLING GREEN, OH 43402
PHONE: (419) 354–9090 1–877–354–9090 TOLL FREE
AFTER HOURS EMERGENCY (419)–354–9001
www.nwwsd.org

WATER MAIN DETAILS
VAVLES AND MISCELLANEOUS

#	DATE	BY	REVISION
1	02/25/13	TB	CONTENT REVISION
2	03/25/13	TB	TRENCH DETAIL

DRAWN BY: CHECKED BY:

NWSD 4 / 5

NORTHWESTERN THE DISTRICT WATER & SEWER

FORCE MAIN AND SEWER DETAILS
NORTHWESTERN WATER AND SEWER DISTRICT,
WILLOWBEND PUMP STATION IMPROVEMENTS, SS-307

NO.	DATE	REVISIONS AFTER ISSUED FOR BID	BY
5			
4			
3			
2			
1			

Jones & Henry Engineers, Ltd.
Fluid thinking©.
www.JHeng.com

JOB NO. 796-7215.002
SCALE AS NOTED
THIS LINE SCALES 1" WHEN PLOTTED TO NOTED SCALE

DESIGNED	DRAWN	CHECKED
TAB	BJD	TAB

STATUS: ISSUED FOR BID
DATE: AUGUST 2021
SHEET NO.
FM-0.5
22 OF 50

TOL-7215\02FM05-FORCE MAIN SEWER DETAILS
2/17/2021 10:34 AM - SWILLIS
8/12/2021 2:43 PM

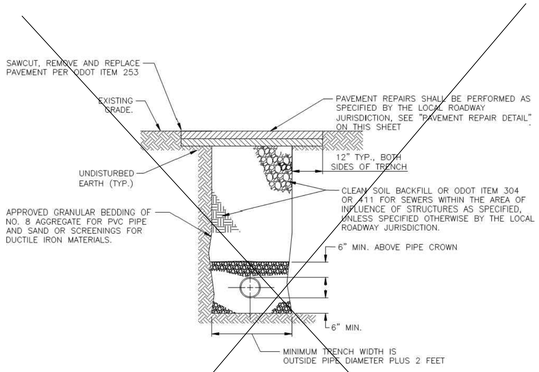

TRENCH AND BEDDING DETAIL

NOT TO SCALE

STATE HIGHWAY TRENCH AND BEDDING NOTES FOR WORK IN ODOT RIGHT OF WAY

1. BEDDING MATERIAL SHALL BE PROVIDED IN ACCORDANCE WITH ODOT 638.05 AND SHALL BE 6-INCHES IN THICKNESS BELOW THE INVERT OF THE PIPE.
2. BEDDING MATERIAL SHALL BE EXTENDED TO A DEPTH OF 6-INCHES ABOVE THE CROWN OF THE PIPE.
3. PAVEMENT REPAIRS SHALL BE PERFORMED IN ACCORDANCE WITH THE "PAVEMENT REPAIR DETAIL."

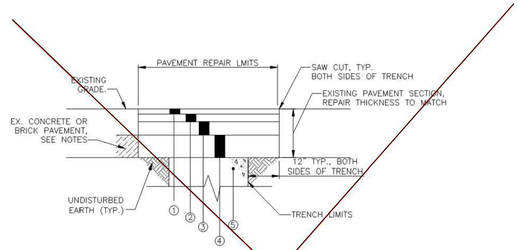

① 1 1/4" ODOT ITEM 448 ASPHALT CONCRETE SURFACE COURSE, TYPE 1, PG 64-22.
② 1 3/4" ODOT ITEM 448 ASPHALT CONCRETE INTERMEDIATE COURSE, TYPE 2, PG 64-22.
③ 6" ODOT ITEM 301 ASPHALT CONCRETE BASE COURSE, PG 64-22. (2 LIFTS)*
④ 12" ODOT ITEM 304 AGGREGATE BASE.
⑤ ODOT ITEM 613 LOW STRENGTH MORTAR BACKFILL.*

PAVEMENT REPAIR DETAIL

NOT TO SCALE

NOTES

1. THE THICKNESS OF THE PAVEMENT REPAIR SECTION SHALL NOT BE LESS THAN THE EXISTING PAVEMENT SECTION INCLUDING AGGREGATE BASE MATERIAL.
2. CONCRETE OR BRICK BASE MATERIAL SHALL BE REPLACED WITH A MINIMUM OF 8-INCHES OF ODOT ITEM 452, NON-REINFORCED CONCRETE PAVEMENT. THE THICKNESS OF THE CONCRETE BASE REPAIR SHALL NOT BE LESS THAT THE EXISTING BASE MATERIAL. SEE ODOT BP-2.1 AND ODOT BP-2.2.

* ODOT PAVEMENT ONLY

NOTE: ALL DISTANCES SHOWN ARE MINIMUM DISTANCE RESTRAINED IN EACH DIRECTION FROM THE BEND.

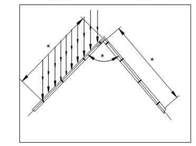

FIGURE 1. HORIZONTAL BEND

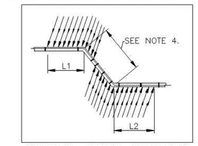

FIGURE 2. VERTICAL DOWN BEND AND OFFSET

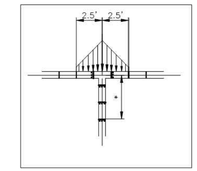

FIGURE 3. TEE

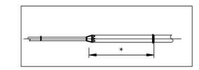

FIGURE 4. REDUCER

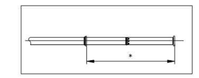

FIGURE 5. DEAD END

	FITTING TYPE	RESTRAINED LENGTH OF PIPE (FT) SEE NOTE 1						COMMENTS
		6"	8"	10"	12"	16"	20"	
HORIZONTAL	11 1/4° BEND	2'	2'	2'	4'	4'	6'	
	22 1/2° BEND	4'	4'	4'	6'	6'	11'	
	45° BEND	6'	8'	8'	10'	14'	23'	
	90° BEND	14'	16'	20'	24'	30'	54'	
	DEAD END / PLUG	36'	46'	56'	68'	88'	164'	
REDUCER	MAIN X 4"	18'	34'	–	–	–	–	SEE NOTE 2.
	MAIN X 6"	–	20'	36'	–	–	–	SEE NOTE 2.
	MAIN X 8"	–	–	20'	36'	–	–	SEE NOTE 2.
	MAIN X 10"	–	–	–	20'	52'	–	SEE NOTE 2.
	MAIN X 12"	–	–	–	–	38'	103'	SEE NOTE 2.
TEES	MAIN X 4" TEE	10'	4'	2'	2'	2'	–	SEE NOTE 3.
	MAIN X 6" TEE	26'	22'	18'	14'	8'	–	SEE NOTE 3.
	MAIN X 8" TEE	38'	36'	34'	30'	26'	–	SEE NOTE 3.
	MAIN X 10" TEE	50'	48'	46'	44'	40'	63'	SEE NOTE 3.
	MAIN X 12" TEE	62'	60'	58'	56'	54'	73'	SEE NOTE 3.
	MAIN X 16" TEE	84'	82'	80'	80'	76'	111'	SEE NOTE 3.
	VERTICAL BEND (L1)	22'	28'	34'	40'	50'	68'	45° ANGLE
	VERTICAL BEND (L2)	6'	8'	8'	8'	12'	18'	45° ANGLE

* DISTANCES TO BE AS PER MECHANICAL JOINT RESTRAINT TABLE.

JOINT RESTRAINT NOTES:

1. RESTRAINED LENGTH BASED UPON TEST PRESSURE OF 150 PSI, SAFETY FACTOR OF 1.5 AND CLAY (CL) SOIL TYPE. OTHER SOIL TYPES MAY REQUIRE DIFFERENT RESTRAINED LENGTHS.
2. RESTRAINED LENGTH FOR REDUCERS SHALL BE MEASURED ALONG LARGER DIAMETER PIPE.
3. RESTRAINED LENGTH FOR TEES SHALL BE MEASURED ALONG BRANCH CONNECTION.
4. ALL JOINTS BETWEEN UPPER AND LOWER PIPE LENGTH SHALL BE RESTRAINED FOR VERTICAL BENDS.

MECHANICAL JOINT RESTRAINTS

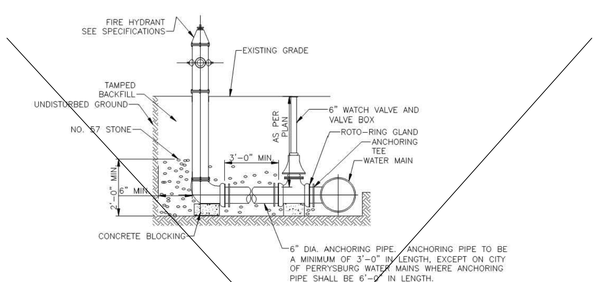

HYDRANT DETAIL PERPENDICULAR TO WATER MAIN
HYDRANT ASSEMBLY TYPE "A"

NOT TO SCALE

WL-#	FIRE DEPARTMENT	VALVE OPENING DIRECTION	STEAMER / PUMPER NOZZLE		HOSE NOZZLE		
			SIZE	SPEC	NO.	SIZE	THREAD SPEC
WL-100	LAKE TOWNSHIP	CLOCKWISE	5" DIA.	STORZ	2	2 1/2"	NST
WL-100	NORTHWOOD	CLOCKWISE	5" DIA.	STORZ	2	2 1/2"	8 TPI
WL-100	PERRYSBURG TWP.	CLOCKWISE	5" DIA.	STORZ	2	2 1/2"	NST
WL-100	TROY TOWNSHIP	CLOCKWISE	5" DIA.	STORZ	2	2 1/2"	NST
WL-200	LAKE TOWNSHIP	CLOCKWISE	5" DIA.	STORZ	2	2 1/2"	NST
WL-200	NORTHWOOD	CLOCKWISE	5" DIA.	STORZ	2	2 1/2"	8 TPI
WL-900	WEST MILGROVE	COUNTERCLOCKWISE	4 1/2" DIA.	STORZ	2	2 1/2"	8 TPI
WL-4000	NORTHWOOD	CLOCKWISE	5" DIA.	STORZ	2	2 1/2"	8 TPI
WL-5000	ROSSFORD	CLOCKWISE	5" DIA.	STORZ	2	2 1/2"	8 TPI
OTHER	ALL FIRE DEPARTMENTS	COUNTERCLOCKWISE	4 1/2" DIA.	STORZ	2	2 1/2"	NST

FIRE HYDRANT AND VALVE SCHEDULE

ALL FIRE HYDRANTS SHALL OPEN COUNTERCLOCKWISE

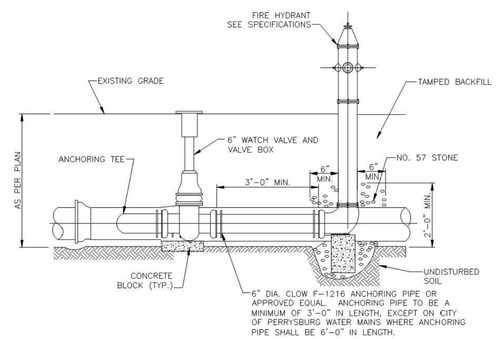

HYDRANT DETAIL PARALLEL TO WATER MAIN
HYDRANT ASSEMBLY TYPE "B"

NOT TO SCALE

FIRE HYDRANT NOTES:

1. ALL NOZZLES SHALL CORRESPOND TO THE APPLICABLE EXISTING LOCAL FIRE APPARATUS.
2. UPPER BARREL TO HAVE ONE (1) FIVE INCH (5-IN) STORZ FITTING BY HARRINGTON, INC. THE STORZ FITTING SHALL BE COMPATIBLE WITH FIVE INCH (5-IN) STORZ COUPLED FIRE HOSES. THE FITTING SHALL BE CONSTRUCTED OF AIRCRAFT QUALITY ALUMINUM WITH BRASS CONNECTION, BRASS SEALING FACE AND UNINTERRUPTED BRASS WATERWAY. THE ALUMINUM TO BE HARD COAT ANODIZED IN ACCORDANCE WITH ASE-AMS-A-8625f, TYPE 3, DARK GRAY, FOR CORROSION PROTECTION. THE STORZ FITTING SHALL BE AN INTEGRAL PART OF THE FIRE HYDRANT ASSEMBLY, RESISTANT TO TAMPERING OR REMOVAL BY UNAUTHORIZED PERSONNEL. ADD-ON STORZ COMPATIBLE ADAPTERS ARE NOT ACCEPTABLE.
3. HYDRANT DRAINS SHALL NOT BE PLUGGED, A 10 CUBIC FOOT GRAVEL POCKET (#57 STONE) OR DRY WELL SHALL BE PROVIDED UNLESS THE NATURAL SOILS WILL PROVIDE ADEQUATE DRAINAGE IN ACCORDANCE WITH TEN STATES STANDARDS 8.4.4.
4. NWSD FIRE HYDRANTS SHALL BE PAINTED SAFETY YELLOW IN ACCORDANCE WITH THE SPECIFICATIONS.
5. PRIVATE FIRE HYDRANTS SHALL BE PAINTED RED IN ACCORDANCE WITH THE SPECIFICATIONS.
6. FIRE HYDRANTS SHALL BE PLACED ON CONCRETE BLOCKING SUPPORTED BY UNDISTURBED EARTH.

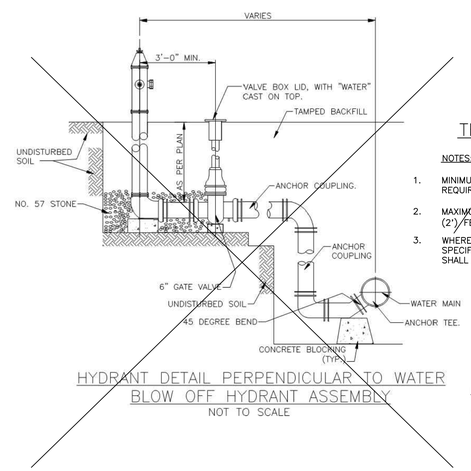

HYDRANT DETAIL PERPENDICULAR TO WATER BLOW OFF HYDRANT ASSEMBLY

NOT TO SCALE

SIZE	MINIMUM TRENCH WITDH
6"	2'-0"
8"	2'-1"
10"	2'-3"
12"	2'-5"
15"	2'-8"
18"	3'-0"
21"	3'-4"
24"	3'-8"
27"	3'-11"
30"	4'-4"
36"	5'-0"

TRENCH WIDTH SCHEDULE

NOTES:

1. MINIMUM TRENCH WIDTH SHALL MEET MANUFACTURER'S REQUIREMENTS.
2. MAXIMUM TRENCH WIDTH SHALL BE NO MORE THAN TWO (2') FEET PLUS THE PIPE DIAMETER.
3. WHERE APPLICABLE AND NOT OTHERWISE STATED IN THE SPECIFICATIONS, THE MINIMUM TRENCH WIDTH SHOWN ABOVE SHALL BE THE PAY WIDTH FOR TRENCHING IN ROCK.

NOTE FOR USE:
THE NOTED WATER MAIN DETAILS SHALL APPLY TO FORCE MAINS.

2 WORKING DAYS BEFORE YOU DIG
CALL TOLL FREE 800-362-2764
OHIO UTILITIES PROTECTION SERVICE

Ohio Utilities Protection Service Call 811 before you dig

Disclaimer: The content of this document is intended for illustrative purposes only and is not complete. The Northwestern Water and Sewer District expressly disclaims any and all liability for any and all reliance thereon. All uses, other than personally, are strictly prohibited.

NORTHWESTERN WATER & SEWER DISTRICT
12560 MIDDLETON PIKE, PO BOX 348
BOWLING GREEN, OH 43402
PHONE: (419) 354-9090 1-877-354-9090 TOLL FREE
AFTER HOURS EMERGENCY (419)-354-9001
www.nwwsd.org

NORTHWESTERN THE DISTRICT WATER & SEWER

WATER MAIN DETAILS
TRENCH AND HYDRANT DETAILS

FORCE MAIN AND SEWER DETAILS
NORTHWESTERN WATER AND SEWER DISTRICT,
WILLOWBEND PUMP STATION IMPROVEMENTS, SS-307

NO.	DATE	REVISIONS AFTER ISSUED FOR BID	BY
5			
4			
3			
2			
1			

DRAWN BY: #	DATE	BY	REVISION	CHECKED BY:
	05/29/13	TB	CONTENT REVISION	
	09/25/13	TB	TRENCH DETAIL	
	10/7/14	MD	FIRE HYDRANT & VALVE SCHEDULE	

NWSD 3 / 5

Jones & Henry Engineers, Ltd.
Fluid thinking©.
www.JHeng.com

JOB NO. 796-7215.002
SCALE NO SCALE
THIS LINE SCALES 1" WHEN PLOTTED TO NOTED SCALE

DESIGNED	DRAWN	CHECKED
TAB	BJD	TAB

STATUS: ISSUED FOR BID
DATE: AUGUST 2021
SHEET NO.
FM-0.6
23 OF 50

TOL-7215002FM05-TRENCH AND HYDRANT DETAILS
JT 7/22/2021 9:43 AM - SMILLIS
8/12/2021 2:45 PM

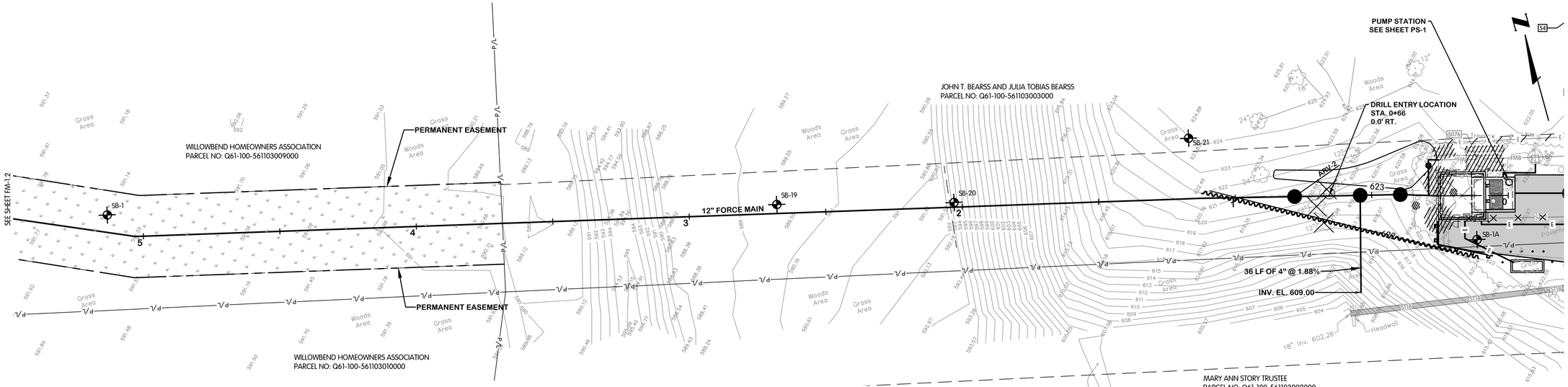

WILLOWBEND HOMEOWNERS ASSOCIATION EASEMENT & PUMP STATION SITE

NOTES:

1. THE LIMITS FOR CLEARING AND GRUBBING SHALL BE CONFINED TO THE AREAS MARKED AS "TEMPORARY EASEMENT" OR "PERMANENT EASEMENT". INDIVIDUAL TREES ARE NOT SHOWN FOR REMOVAL. CLEARING AND GRUBBING SHALL BE PERFORMED UNDER THE SUPERVISION OF THE OWNER.
2. A 16' ENTRY ANGLE IS SHOWN TO ACHIEVE THE VERTICAL ALIGNMENT SHOWN. THE CONTRACTOR MAY UTILIZE TEMPORARY FILL OR BLOCKING TO ELEVATE DRILL MACHINE TO ACHIEVE THIS ENTRY ANGLE.

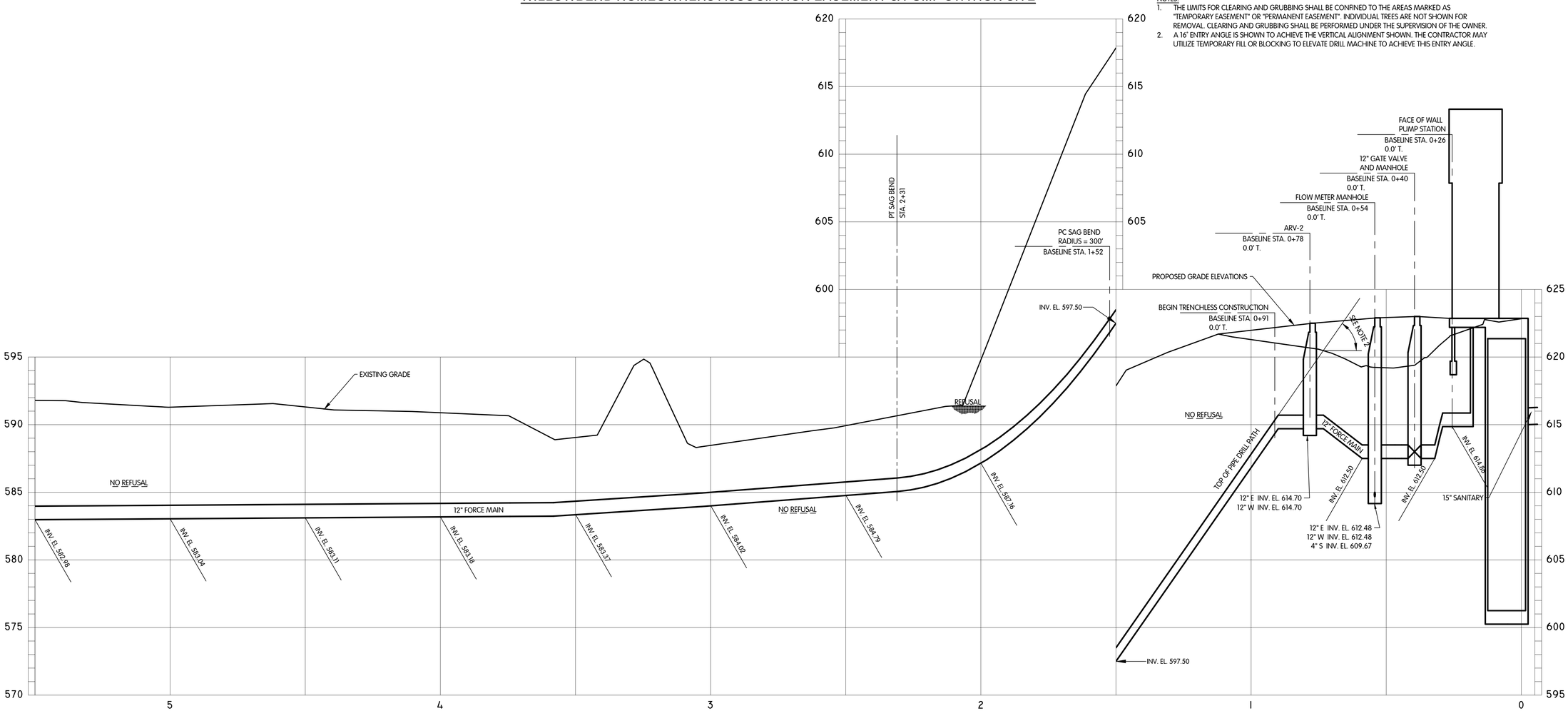

NORTHWESTERN THE DISTRICT WATER & SEWER

EASEMENT FORCE MAIN PLAN AND PROFILE STA. 0+00 TO 5+50

NORTHWESTERN WATER AND SEWER DISTRICT,
WILLOWBEND PUMP STATION IMPROVEMENTS, SS-307

NO.	DATE	REVISIONS AFTER ISSUED FOR BID	BY
5			
4			
3			
2			
1			

Jones & Henry Engineers, Ltd.

Fluid thinking©.
www.JHeng.com

JOB NO. 796-7215.002

SCALE 1"= 20' HOR. 1"=4' VERT.

THIS LINE SCALES 1" WHEN PLOTTED TO NOTED SCALE

DESIGNED	DRAWN	CHECKED
TAB	BJD	TAB

STATUS: ISSUED FOR BID

DATE: AUGUST 2021

SHEET NO.

FM-1.1

24 OF 50

TOL-7215\02FM11-STA 0+00 TO 5+50
8/12/2021 9:45 AM - BDRILL
8/12/2021 2:46 PM

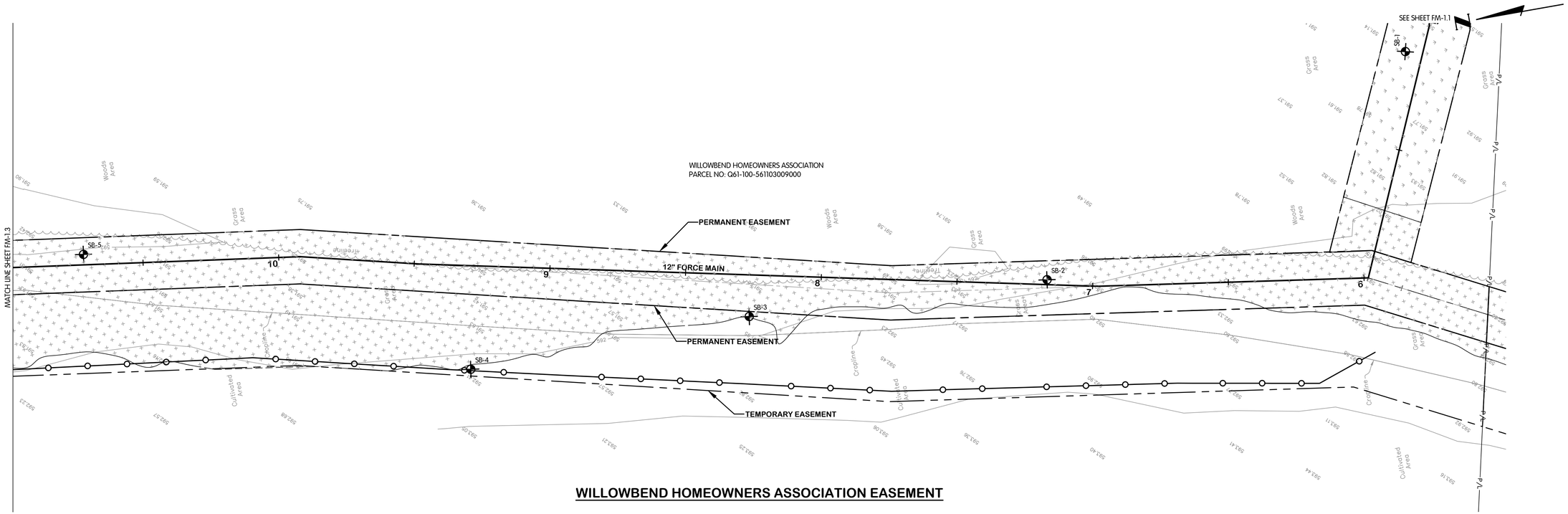

WILLOWBEND HOMEOWNERS ASSOCIATION EASEMENT

NOTES:

1. THE LIMITS FOR CLEARING AND GRUBBING SHALL BE CONFINED TO THE AREAS MARKED AS "TEMPORARY EASEMENT" OR "PERMANENT EASEMENT". INDIVIDUAL TREES ARE NOT SHOWN FOR REMOVAL. CLEARING AND GRUBBING SHALL BE PERFORMED UNDER THE SUPERVISION OF THE OWNER.

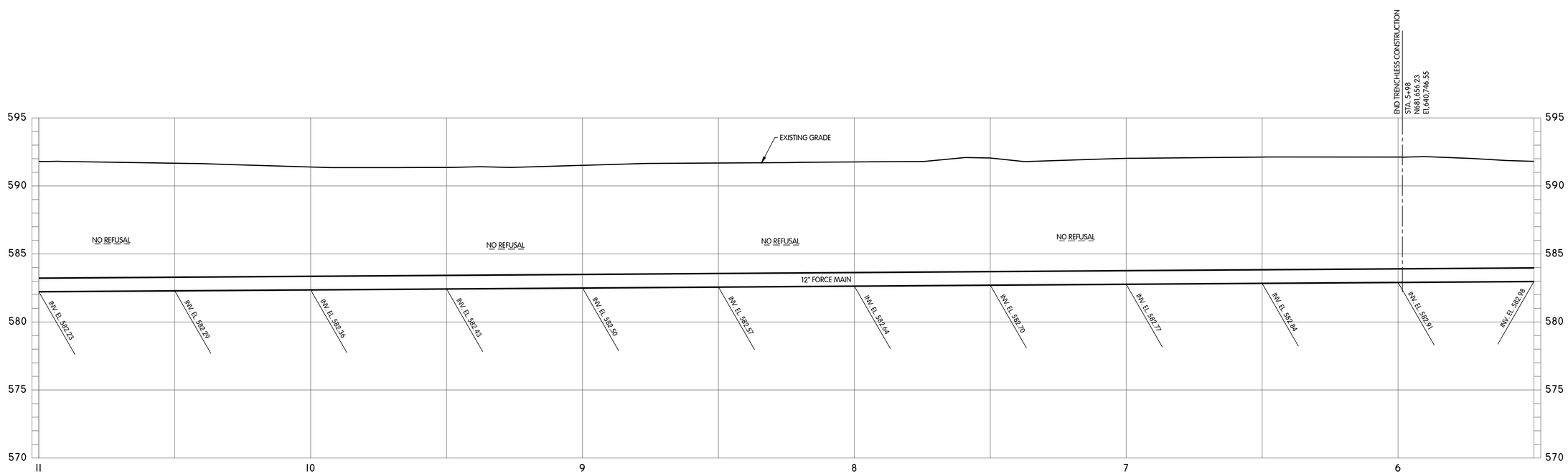

NORTHWESTERN THE DISTRICT WATER & SEWER

WILLOWBEND HOMEOWNERS ASSOCIATION EASEMENT
FORCE MAIN
PLAN AND PROFILE
STA. 5+50 TO 11+00

NORTHWESTERN WATER AND SEWER DISTRICT,
WILLOWBEND PUMP STATION IMPROVEMENTS, SS-307

NO.	DATE	REVISIONS AFTER ISSUED FOR BID	BY
5			
4			
3			
2			
1			

Jones & Henry Engineers, Ltd.

Fluid thinking©.
www.JHeng.com

JOB NO. 796-7215.002

SCALE 1"= 20' HOR. 1"=4' VERT.

THIS LINE SCALES 1" WHEN PLOTTED TO NOTED SCALE

DESIGNED	DRAWN	CHECKED
TAB	BJD	TAB

STATUS: ISSUED FOR BID

DATE: AUGUST 2021

SHEET NO.

FM-1.2

25 OF 50

TOL-7215002PMP-STA 5+50 TO 11+00
BY: BJDUNN ON: 8/12/2021 11:44 AM - BORILL
8/12/2021 2:44 PM

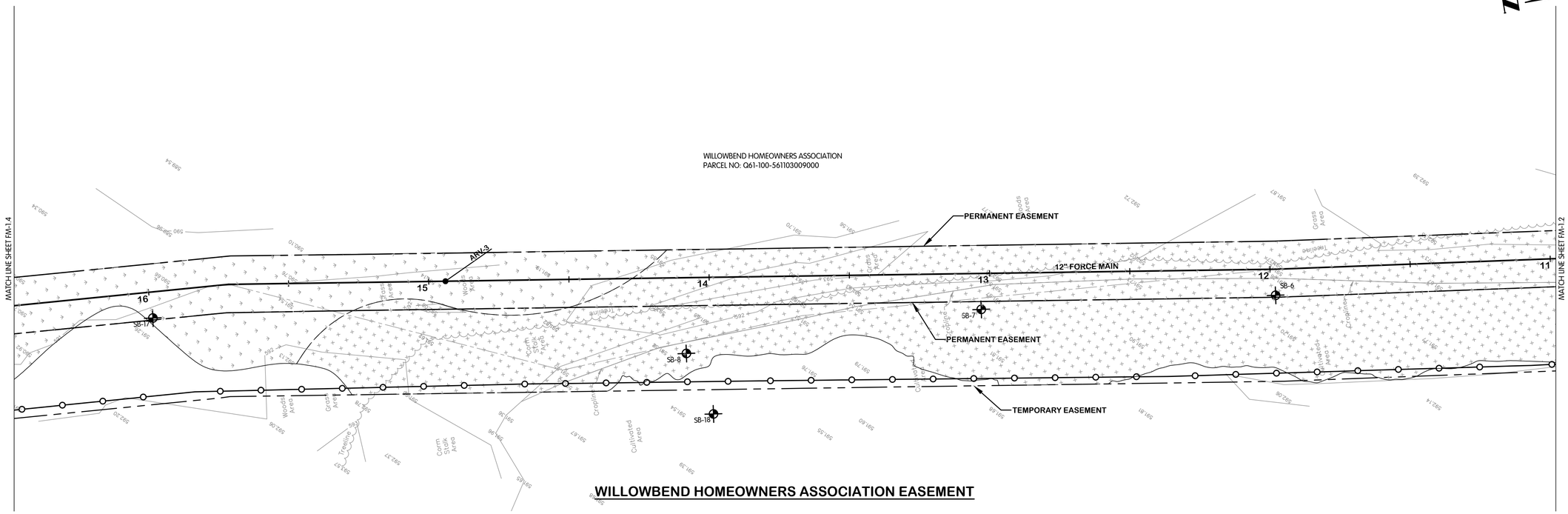

WILLOWBEND HOMEOWNERS ASSOCIATION EASEMENT

NOTES:

1. THE LIMITS FOR CLEARING AND GRUBBING SHALL BE CONFINED TO THE AREAS MARKED AS "TEMPORARY EASEMENT" OR "PERMANENT EASEMENT". INDIVIDUAL TREES ARE NOT SHOWN FOR REMOVAL. CLEARING AND GRUBBING SHALL BE PERFORMED UNDER THE SUPERVISION OF THE OWNER.

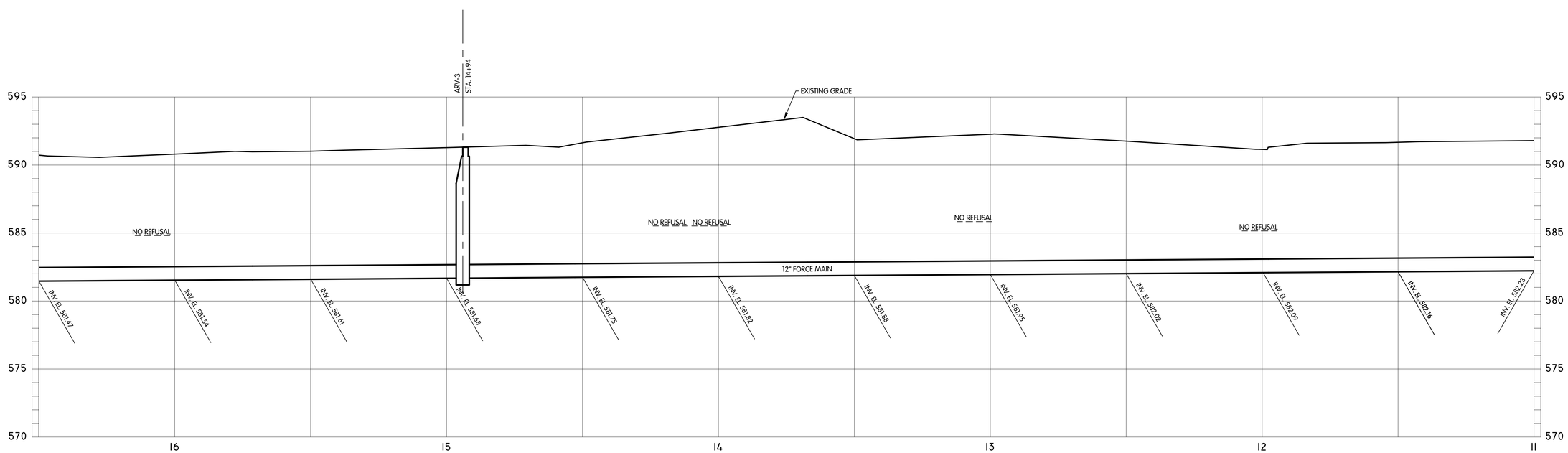

NORTHWESTERN THE DISTRICT WATER & SEWER

WILLOWBEND HOMEOWNERS ASSOCIATION EASEMENT
FORCE MAIN
PLAN AND PROFILE
STA. 11+00 TO 16+50

NORTHWESTERN WATER AND SEWER DISTRICT,
WILLOWBEND PUMP STATION IMPROVEMENTS, SS-307

NO.	DATE	REVISIONS AFTER ISSUED FOR BID	BY
5			
4			
3			
2			
1			

Jones & Henry Engineers, Ltd.
Fluid thinking®.
www.JHeng.com

JOB NO. 796-7215.002

SCALE 1"= 20' HOR.
1"=4' VERT.

THIS LINE SCALES 1" WHEN PLOTTED TO NOTED SCALE

DESIGNED	DRAWN	CHECKED
TAB	BJD	TAB

STATUS: ISSUED FOR BID
DATE: AUGUST 2021

SHEET NO.
FM-1.3
26 OF 50

TOL-7215002PM13-STA 11+00 TO 16+50
JH_PROPOSED_ALIGN_BORILL
8/12/2021 2:47 PM

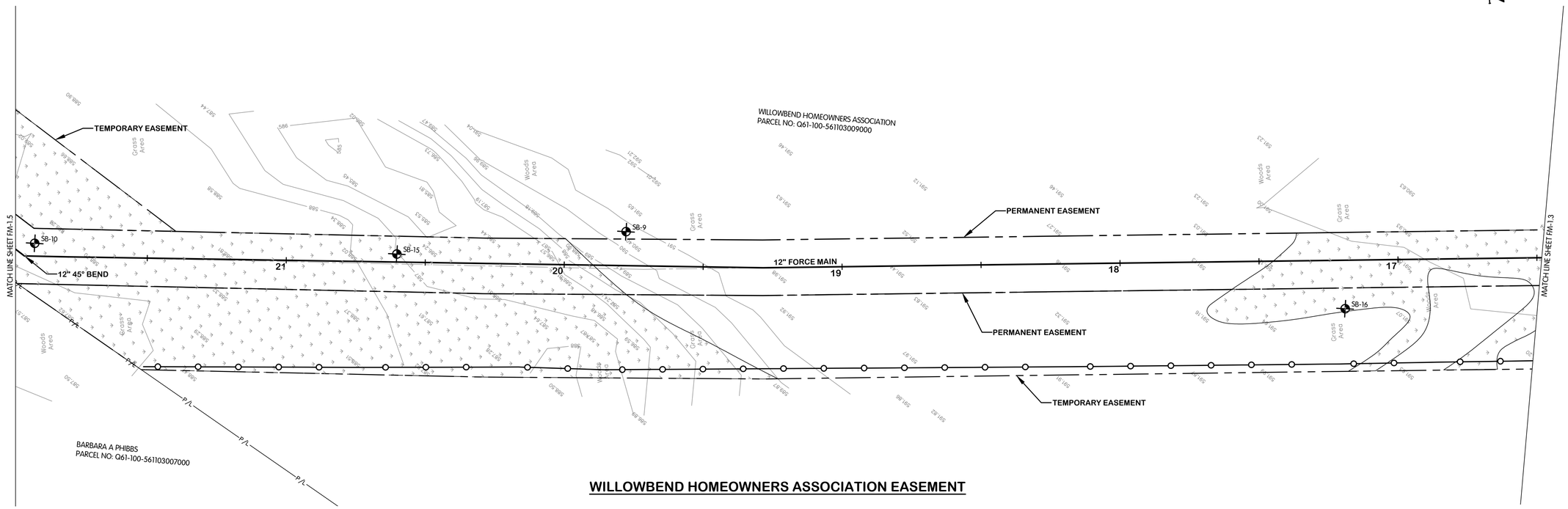

WILLOWBEND HOMEOWNERS ASSOCIATION EASEMENT

NOTES:

1. THE LIMITS FOR CLEARING AND GRUBBING SHALL BE CONFINED TO THE AREAS MARKED AS "TEMPORARY EASEMENT" OR "PERMANENT EASEMENT". INDIVIDUAL TREES ARE NOT SHOWN FOR REMOVAL. CLEARING AND GRUBBING SHALL BE PERFORMED UNDER THE SUPERVISION OF THE OWNER.

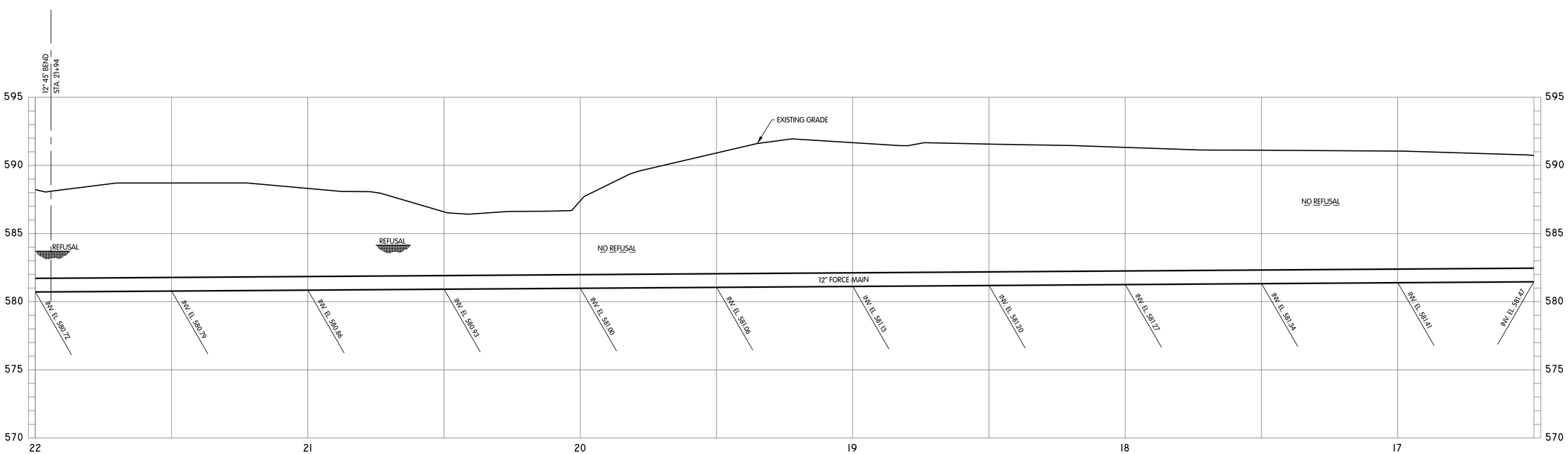

NORTHWESTERN THE DISTRICT WATER & SEWER

WILLOWBEND HOMEOWNERS ASSOCIATION EASEMENT
FORCE MAIN
PLAN AND PROFILE
STA. 16+50 TO 22+00

NORTHWESTERN WATER AND SEWER DISTRICT,
WILLOWBEND PUMP STATION IMPROVEMENTS, SS-307

NO.	DATE	REVISIONS AFTER ISSUED FOR BID	BY
5			
4			
3			
2			
1			

Jones & Henry Engineers, Ltd.

Fluid thinking©.
www.JHeng.com

JOB NO. 796-7215.002

SCALE 1"= 20' HOR.
1"=4' VERT.

THIS LINE SCALES 1" WHEN PLOTTED TO NOTED SCALE

DESIGNED	DRAWN	CHECKED
TAB	BJD	TAB

STATUS: ISSUED FOR BID

DATE: AUGUST 2021

SHEET NO.

FM-1.4

27 OF 50

TOL-7215002PML-STA 16+50 TO 22+00
BY: BJDRILL
8/02/2021 10:44 AM
8/02/2021 2:47 PM

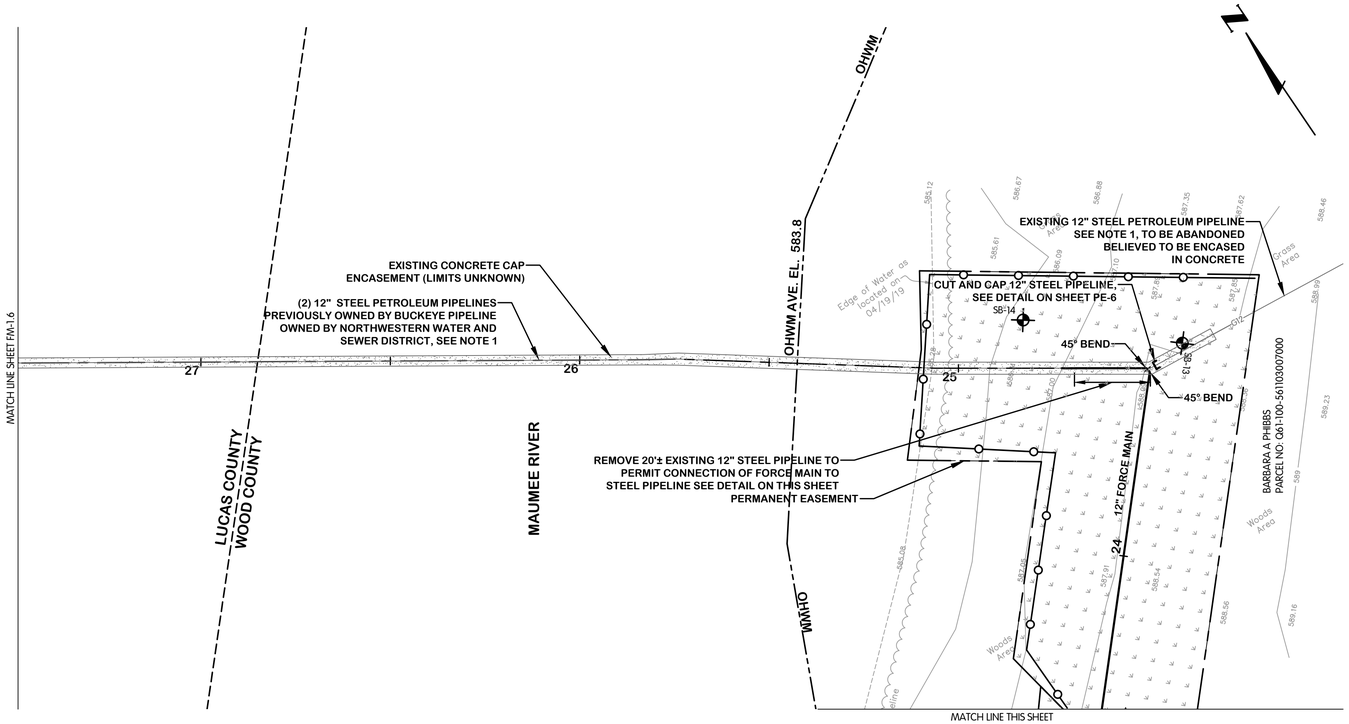

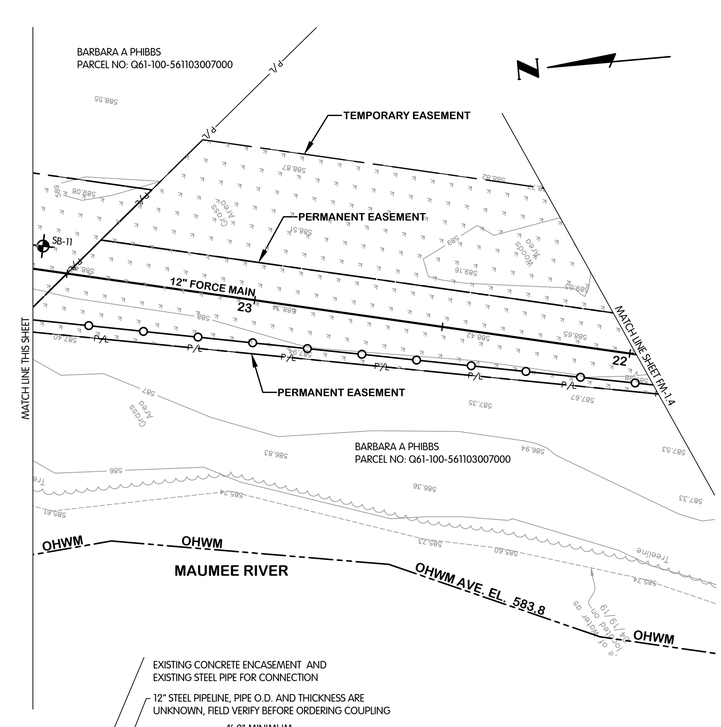

PHIBBS EASEMENT AND RIVER CROSSING

NOTES:

1. THE LOCATION OF THE EXISTING PIPELINE IS AS MARKED IN THE DISTRICT'S GIS DATA BASED UPON GPS OBSERVATIONS MADE IN 2001. THE LOCATION OF THE PIPELINE SHOWN SHOULD BE CONSIDERED APPROXIMATE AND WITHIN 10' OF THE ACTUAL LOCATION. THE CONTRACTOR SHOULD BE PREPARED TO PERFORM LINE EXCAVATION TO A DEPTH OF AT LEAST 10' TO LOCATE THE PIPELINE.
2. THE LIMITS FOR CLEARING AND GRUBBING SHALL BE CONFINED TO THE AREAS MARKED AS "TEMPORARY EASEMENT" OR "PERMANENT EASEMENT". INDIVIDUAL TREES ARE NOT SHOWN FOR REMOVAL. CLEARING AND GRUBBING SHALL BE PERFORMED UNDER THE SUPERVISION OF THE OWNER.

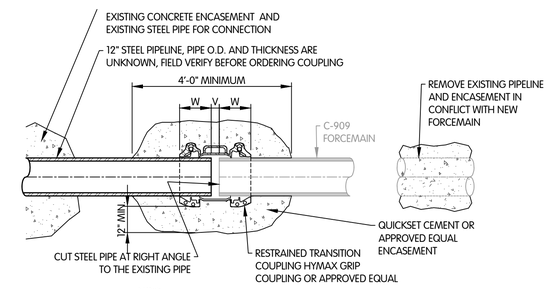

NOTE:
W = AS REQUIRED BY COUPLING MANUFACTURER.
V = AS REQUIRED BY COUPLING MANUFACTURER.

PIPELINE CONNECTION DETAIL

NTS

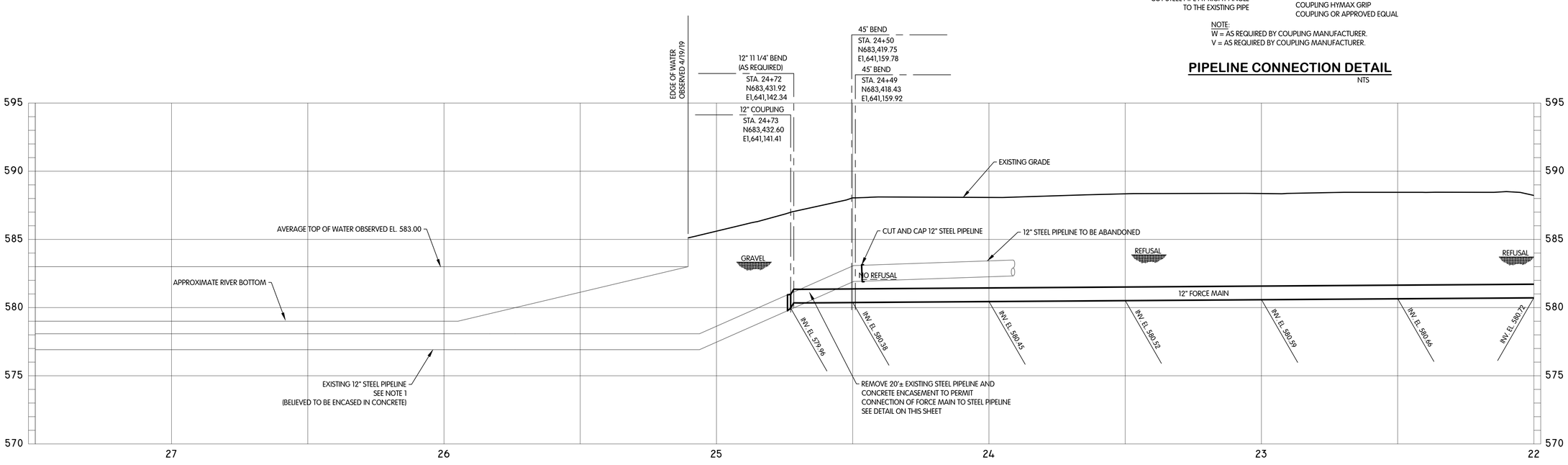

NORTHWESTERN THE DISTRICT WATER & SEWER

PHIBBS EASEMENT AND RIVER CROSSING
FORCE MAIN
PLAN AND PROFILE
STA. 22+00 TO 27+50

NORTHWESTERN WATER AND SEWER DISTRICT,
WILLOWBEND PUMP STATION IMPROVEMENTS, SS-307

NO.	DATE	REVISIONS AFTER ISSUED FOR BID	BY
5			
4			
3			
2			
1			

Jones & Henry Engineers, Ltd.
Fluid thinking©.
www.JHeng.com

JOB NO. 796-7215.002
SCALE 1"= 20' HOR. 1"=4' VERT.
THIS LINE SCALES 1" WHEN PLOTTED TO NOTED SCALE

DESIGNED	DRAWN	CHECKED
TAB	BJD	TAB

STATUS: ISSUED FOR BID
DATE: AUGUST 2021
SHEET NO.
FM-1.5
28 OF 50

TOL-7215002FM15-STA 22+00 TO 27+50
BY:BRIAN JENKINS JR
8/20/2021 8:02 AM

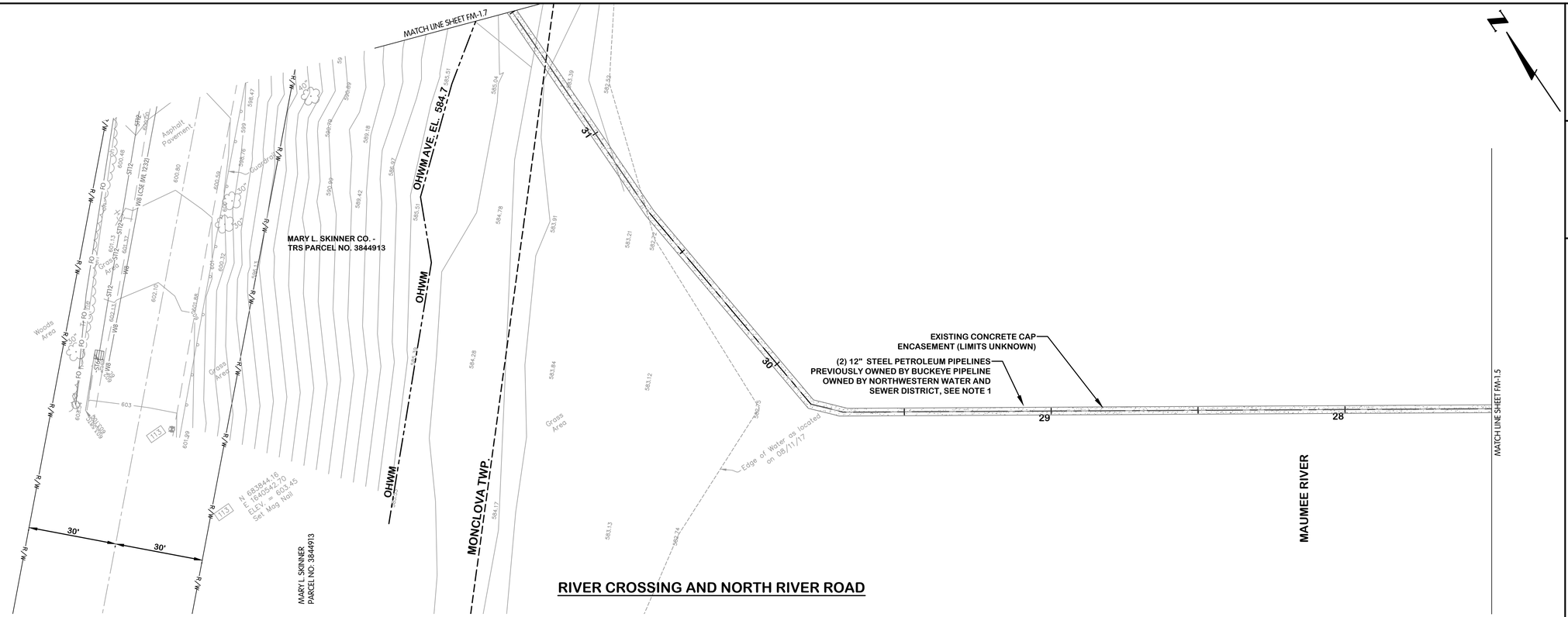

RIVER CROSSING AND NORTH RIVER ROAD

NOTES:

1. THE LOCATION OF THE EXISTING PIPELINE IS AS MARKED IN THE DISTRICT'S GIS DATA BASED UPON GPS OBSERVATIONS MADE IN 2001 AND 2020. THE LOCATION OF THE PIPELINE SHOWN SHOULD BE CONSIDERED APPROXIMATE AND WITHIN 10' OF THE ACTUAL LOCATION. THE CONTRACTOR SHOULD BE PREPARED TO PERFORM LINE EXCAVATION TO A DEPTH OF AT LEAST 10' TO LOCATE THE PIPELINE.
2. EXISTING RECORDS INDICATE PIPELINE ENDS HERE. THE CONTRACTOR MAY BE REQUIRED TO REMOVE A SECTION OF 12" STEEL PIPE LINE AS PART OF THE WORK.
3. THE LIMITS FOR CLEARING AND GRUBBING SHALL BE CONFINED TO THE AREAS MARKED AS "TEMPORARY EASEMENT" OR "PERMANENT EASEMENT". INDIVIDUAL TREES ARE NOT SHOWN FOR REMOVAL. CLEARING AND GRUBBING SHALL BE PERFORMED UNDER THE SUPERVISION OF THE OWNER.
4. RIGHT-OF-WAYS SHOWN BASED ON FOUND MONUMENTATION.

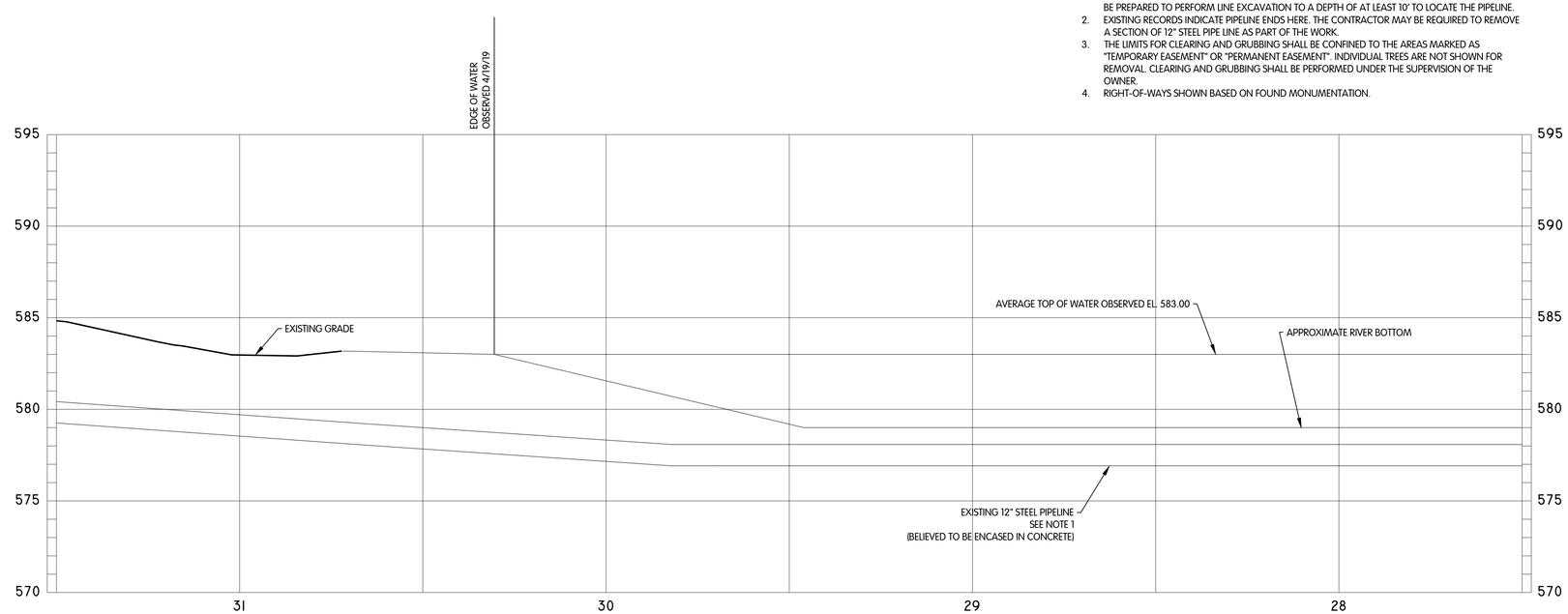

NORTHWESTERN THE DISTRICT WATER & SEWER

EASEMENT
FORCE MAIN
PLAN AND PROFILE
STA. 27+50 TO 31+50

NORTHWESTERN WATER AND SEWER DISTRICT, WILLOWBEND
PUMP STATION IMPROVEMENTS, SS-307

NO.	DATE	REVISIONS AFTER ISSUED FOR BID	BY
5			
4			
3			
2			
1			

Jones & Henry Engineers, Ltd.
Fluid thinking©.
www.JHeng.com

JOB NO.	796-7215.002
SCALE	1"= 20' HOR. 1"=4' VERT.

THIS LINE SCALES 1" WHEN PLOTTED TO NOTED SCALE

DESIGNED	DRAWN	CHECKED
TAB	BJD	TAB

STATUS: ISSUED FOR BID
DATE: AUGUST 2021

SHEET NO.
FM-1.6
29 OF 50

TQL-7215002PMG-STA 27+50 TO 31+50
BY: BJD 8/12/2021 10:04 AM
8/12/2021 2:49 PM

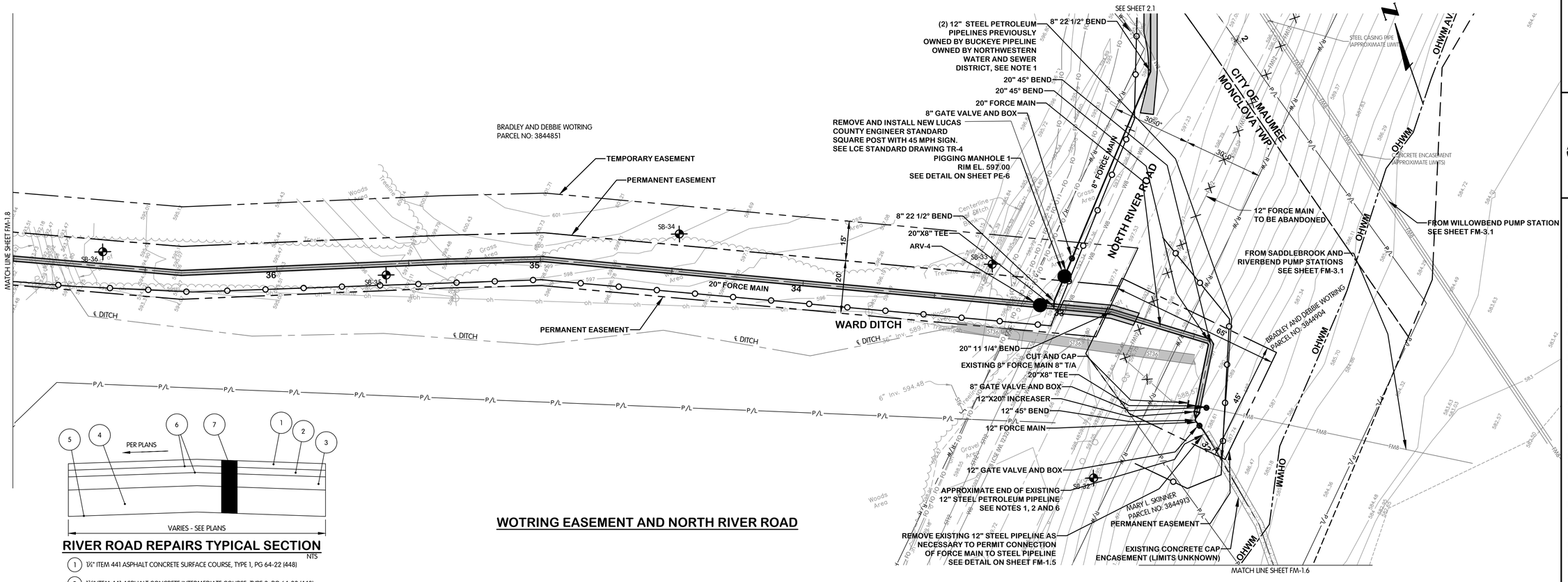

WOTRING EASEMENT AND NORTH RIVER ROAD

RIVER ROAD REPAIRS TYPICAL SECTION

NTS

1. 1¼" ITEM 441 ASPHALT CONCRETE SURFACE COURSE, TYPE 1, PG 64-22 (448)
2. 1½" ITEM 441 ASPHALT CONCRETE INTERMEDIATE COURSE, TYPE 2, PG 64-22 (448)
3. 6" ITEM 302 ASPHALT CONCRETE BASE
4. 6" ITEM 304 AGGREGATE BASE
5. ITEM 204 SUBGRADE COMPACTION
6. ITEM 407 TACK COAT 0.055 GAL/SQ.YD.
7. ITEM 203 PAVEMENT EXCAVATION

LEGEND

FULL DEPTH PAVEMENT REPAIRS, SEE TYPICAL SECTION ON THIS SHEET. REPLACE REMOVED PAVEMENT MARKINGS IN KIND TO MEET THE REQUIREMENTS OF ODOT ITEM 644.

NOTES:

1. THE LOCATION OF THE EXISTING PIPELINE IS AS MARKED IN THE DISTRICT'S GIS DATA BASED UPON GPS OBSERVATIONS MADE IN 2001 AND 2020. THE LOCATION OF THE PIPELINE SHOWN SHOULD BE CONSIDERED APPROXIMATE AND WITHIN 10' OF THE ACTUAL LOCATION. THE CONTRACTOR SHOULD BE PREPARED TO PERFORM LINE EXCAVATION TO A DEPTH OF AT LEAST 10' TO LOCATE THE PIPELINE.
2. THE LIMITS FOR CLEARING AND GRUBBING SHALL BE CONFINED TO THE AREAS MARKED AS "TEMPORARY EASEMENT" OR "PERMANENT EASEMENT". INDIVIDUAL TREES ARE NOT SHOWN FOR REMOVAL. CLEARING AND GRUBBING SHALL BE PERFORMED UNDER THE SUPERVISION OF THE OWNER.
4. RIGHT-OF-WAYS SHOWN BASED ON FOUND MONUMENTATION.
5. IF THE HIGH POINT AT ARV-4 IS ELIMINATED BY INSTALLING THE PIPE ON UPWARD SLOPING GRADE BETWEEN STA.32+4 AND 37+00 ARV-4 MAY BE ELIMINATED. HOWEVER AN ARV WILL NEED TO BE ADDED TO THE 8-INCH FORCEMAIN ON SHEET 2.1
6. THE END OF THE PIPELINES AS FIELD VERIFIED BY THE DISTRICT IN DECEMBER 2020..

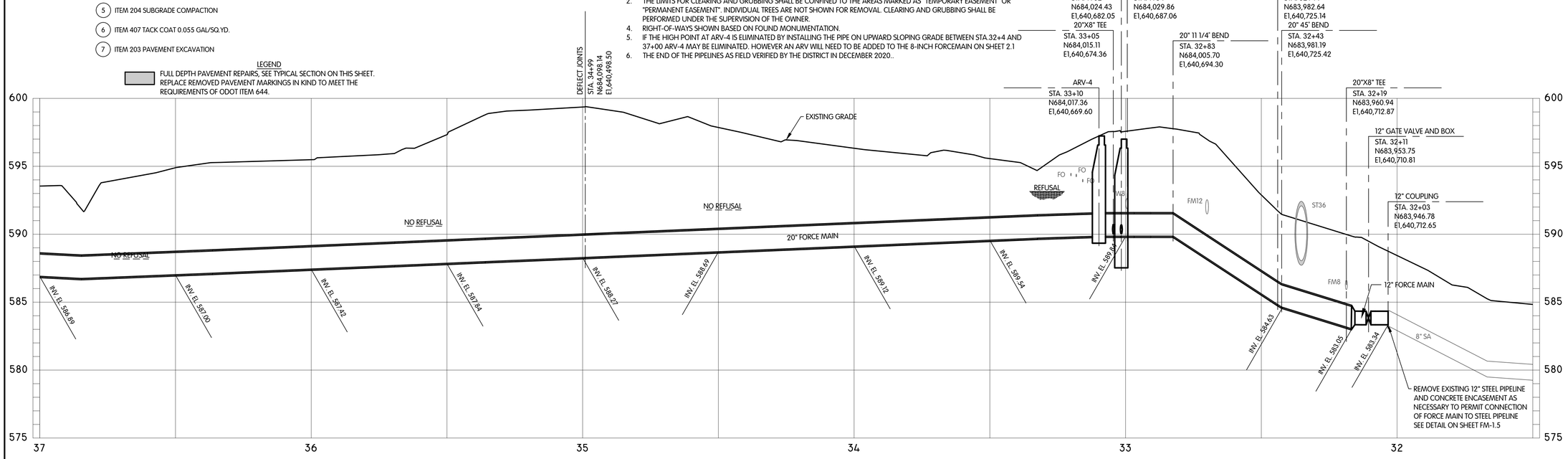

NORTHWESTERN THE DISTRICT WATER & SEWER

WOTRING EASEMENT AND NORTH RIVER ROAD
FORCE MAIN
PLAN AND PROFILE
STA. 31+50 TO 37+00

NORTHWESTERN WATER AND SEWER DISTRICT, WILLOWBEND PUMP STATION IMPROVEMENTS, SS-307

NO.	DATE	REVISIONS AFTER ISSUED FOR BID	BY
5			
4			
3			
2			
1			

Jones & Henry Engineers, Ltd.

Fluid thinking©.
www.JHeng.com

JOB NO.	796-7215.002
SCALE	1"= 20' HOR. 1"=4' VERT.

THIS LINE SCALES 1" WHEN PLOTTED TO NOTED SCALE

DESIGNED	DRAWN	CHECKED
TAB	BJD	TAB

STATUS: ISSUED FOR BID

DATE: AUGUST 2021

SHEET NO.

FM-1.7

30 OF 50

TOL-7215002FM1-STA 31+50 TO 37+00
BY: BRILL, BRIAN D. JR. - BDRILL
8/26/2021 8:02 AM

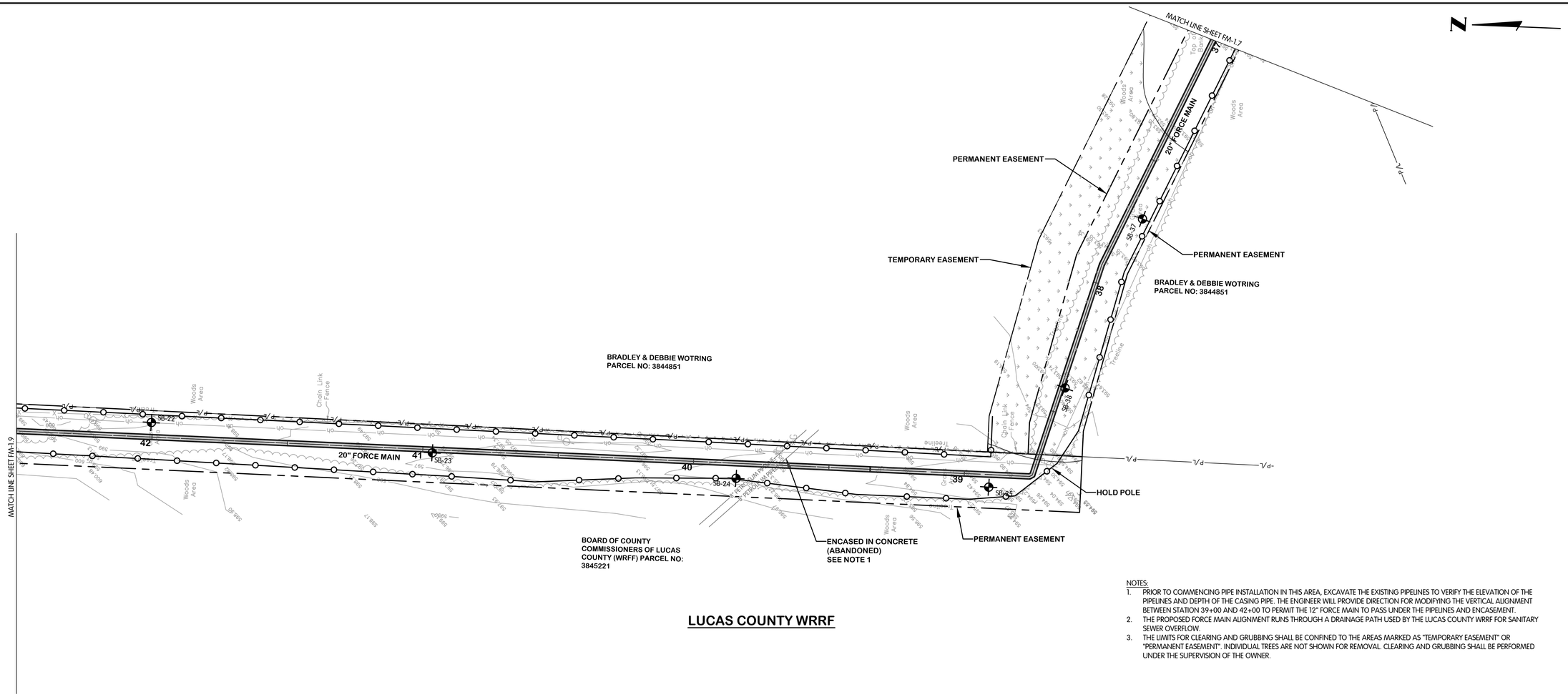

LUCAS COUNTY WRRF

NOTES:

1. PRIOR TO COMMENCING PIPE INSTALLATION IN THIS AREA, EXCAVATE THE EXISTING PIPELINES TO VERIFY THE ELEVATION OF THE PIPELINES AND DEPTH OF THE CASING PIPE. THE ENGINEER WILL PROVIDE DIRECTION FOR MODIFYING THE VERTICAL ALIGNMENT BETWEEN STATION 39+00 AND 42+00 TO PERMIT THE 12" FORCE MAIN TO PASS UNDER THE PIPELINES AND ENCASEMENT.
2. THE PROPOSED FORCE MAIN ALIGNMENT RUNS THROUGH A DRAINAGE PATH USED BY THE LUCAS COUNTY WRRF FOR SANITARY SEWER OVERFLOW.
3. THE LIMITS FOR CLEARING AND GRUBBING SHALL BE CONFINED TO THE AREAS MARKED AS "TEMPORARY EASEMENT" OR "PERMANENT EASEMENT". INDIVIDUAL TREES ARE NOT SHOWN FOR REMOVAL. CLEARING AND GRUBBING SHALL BE PERFORMED UNDER THE SUPERVISION OF THE OWNER.

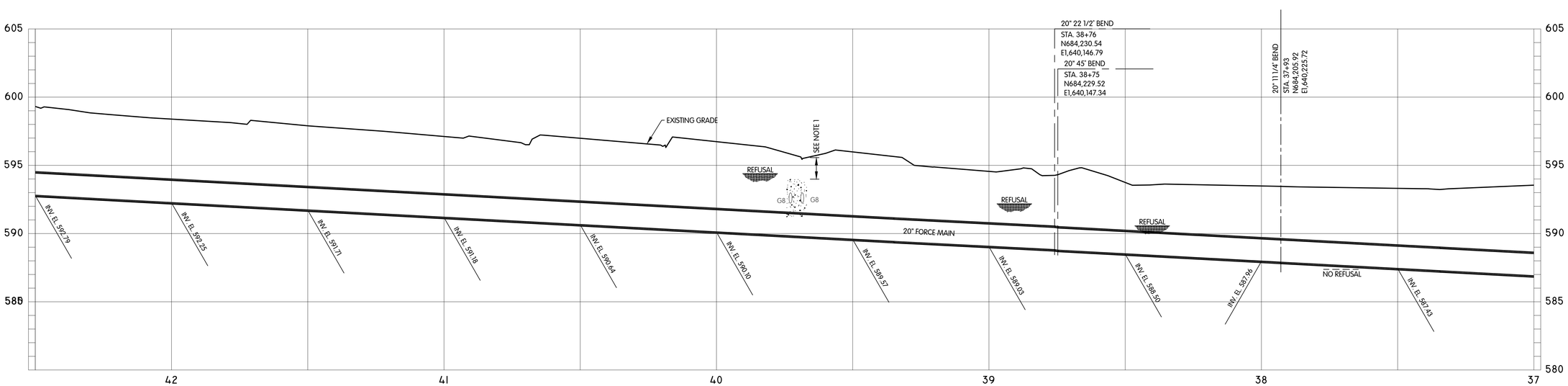

NORTHWESTERN THE DISTRICT WATER & SEWER

EASEMENT
FORCE MAIN
PLAN AND PROFILE
STA. 37+00 TO 42+50

NORTHWESTERN WATER AND SEWER DISTRICT,
WILLOWBEND PUMP STATION IMPROVEMENTS, SS-307

NO.	DATE	REVISIONS AFTER ISSUED FOR BID	BY
5			
4			
3			
2			
1			

Jones & Henry Engineers, Ltd.

Fluid thinking©.
www.JHeng.com

JOB NO.	796-7215.002
SCALE	1"= 20' HOR. 1"=4' VERT.

THIS LINE SCALES 1" WHEN PLOTTED TO NOTED SCALE

DESIGNED	DRAWN	CHECKED
TAB	BJD	TAB

STATUS: ISSUED FOR BID
DATE: AUGUST 2021

SHEET NO.
FM-1.8
31 OF 50

TOL-7215\02FM18-STA 37+00 TO 42+50
BY:BRIAN.JENKINS - SWILLIS
8/12/2021 2:50 PM

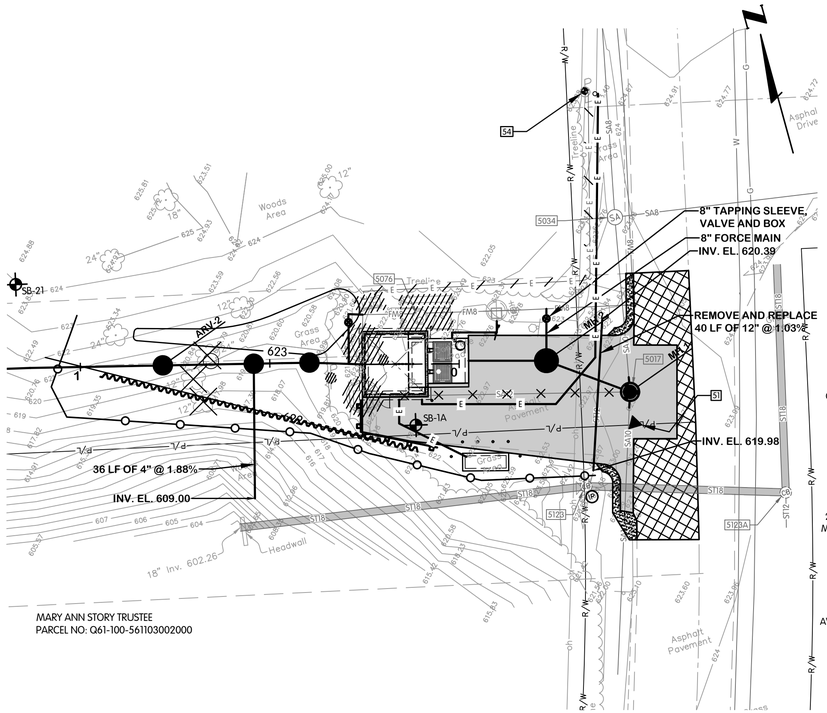

SANITARY INFLUENT SEWER

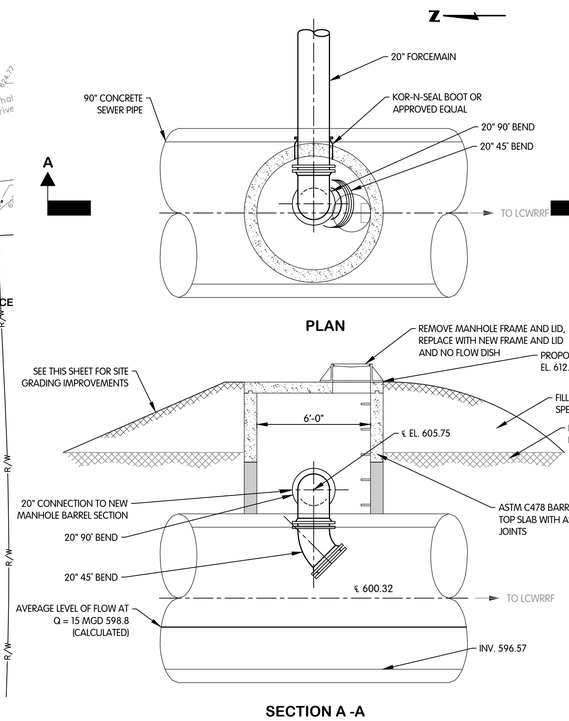

MANHOLE 4327 CONNECTION DETAIL

¼"=1'-0"

NOTES
1. PROVIDE MANHOLE PROTECTIVE COATING IN ACCORDANCE WITH SPECIFICATION SECTION 02555.

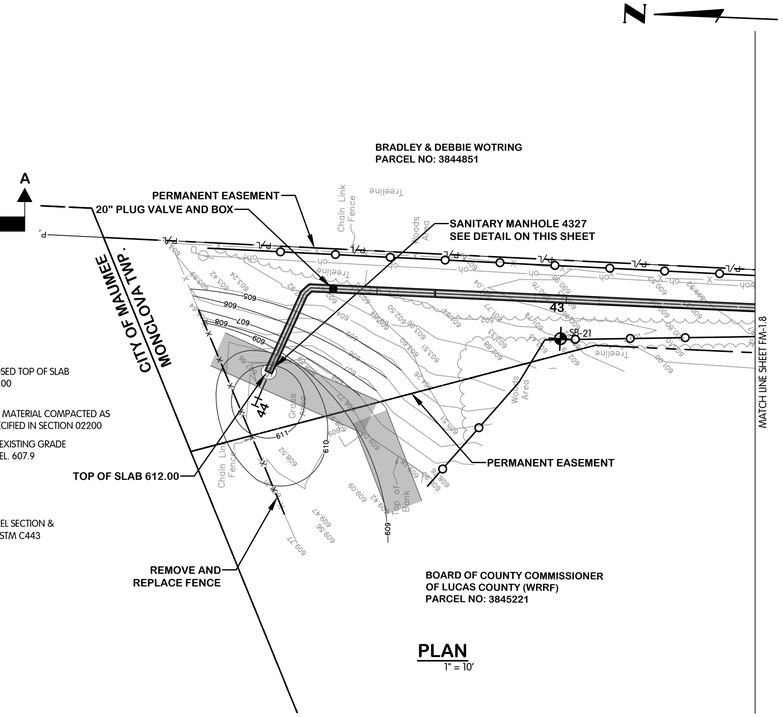

LUCAS COUNTY WRRF

NOTE:
1. THE CONTRACTOR SHALL SCHEDULE THE WORK INVOLVING THE CONNECTION TO THE 90" SEWER DURING PERIODS OF LOW FLOW. THIS MAY INVOLVE COORDINATING THE WORK WITH THE LUCAS COUNTY WRRF STAFF.
2. THE PROPOSED FORCE MAIN ALIGNMENT RUNS THROUGH A DRAINAGE PATH USED BY THE LUCAS COUNTY WRRF FOR SANITARY SEWER OVERFLOW.
3. THE LIMITS FOR CLEARING AND GRUBBING SHALL BE CONFINED TO THE AREAS MARKED AS "TEMPORARY EASEMENT" OR "PERMANENT EASEMENT". INDIVIDUAL TREES ARE NOT SHOWN FOR REMOVAL. CLEARING AND GRUBBING SHALL BE PERFORMED UNDER THE SUPERVISION OF THE OWNER.

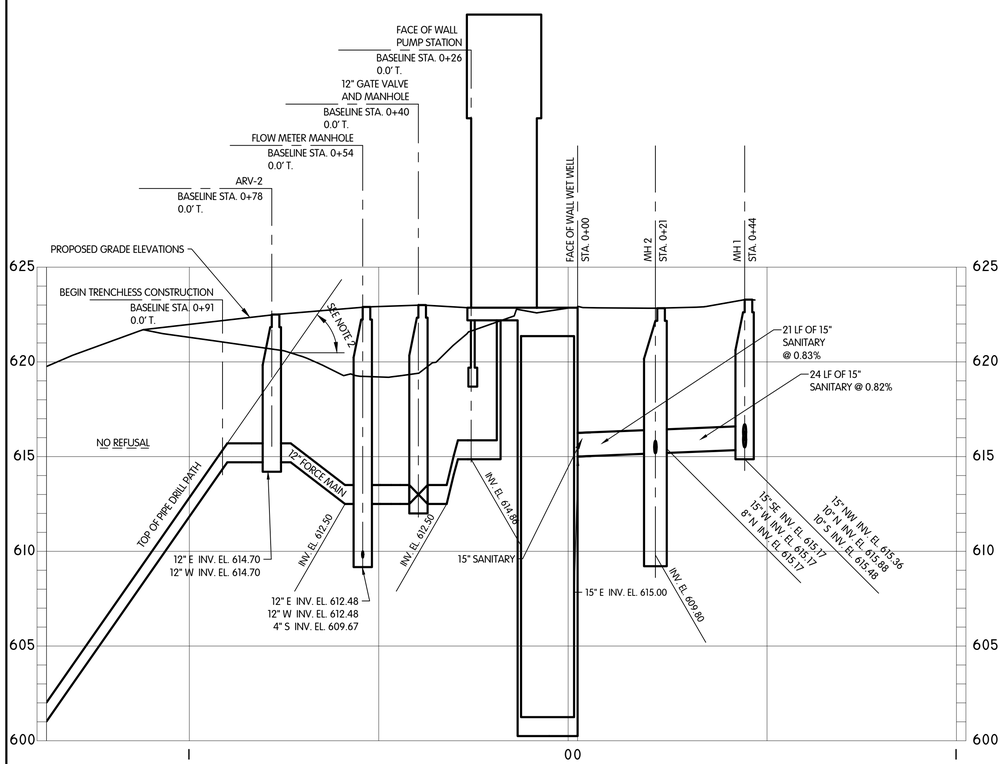

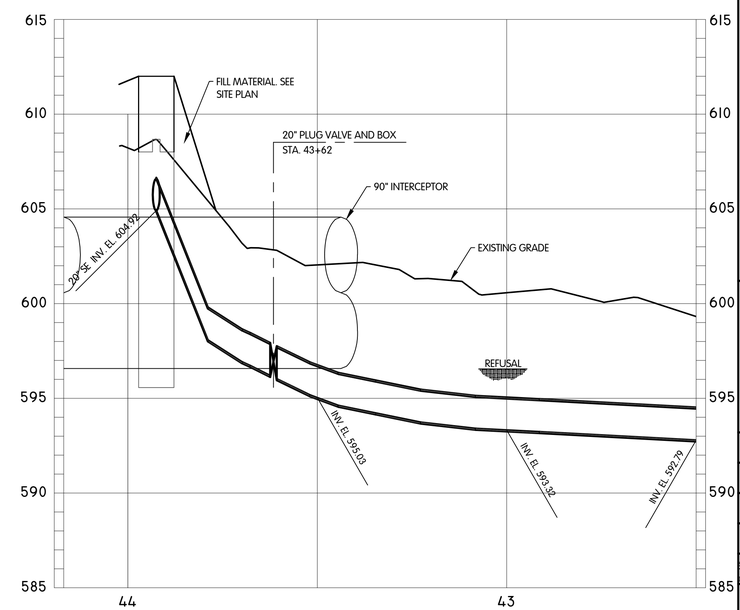

NORTHWESTERN THE DISTRICT WATER & SEWER

EASEMENT
FORCE MAIN
PLAN AND PROFILE
STA. 42+50 TO 44+00

NORTHWESTERN WATER AND SEWER DISTRICT,
WILLOWBEND PUMP STATION IMPROVEMENTS, SS-307

NO.	DATE	REVISIONS AFTER ISSUED FOR BID	BY
5			
4			
3			
2			
1			

Jones & Henry Engineers, Ltd.
Fluid thinking©.
www.JHeng.com

JOB NO. 796-7215.002
SCALE 1"= 20' HOR. 1"=4' VERT.
THIS LINE SCALES 1" WHEN PLOTTED TO NOTED SCALE

DESIGNED	DRAWN	CHECKED
TAB	BJD	TAB

STATUS: ISSUED FOR BID
DATE: AUGUST 2021
SHEET NO.
FM-1.9
32 OF 50

TOL-7215002FM19-STA 42+50 TO 44+00
8/26/2021 8:34 AM - BDRILL
8/26/2021 8:02 AM

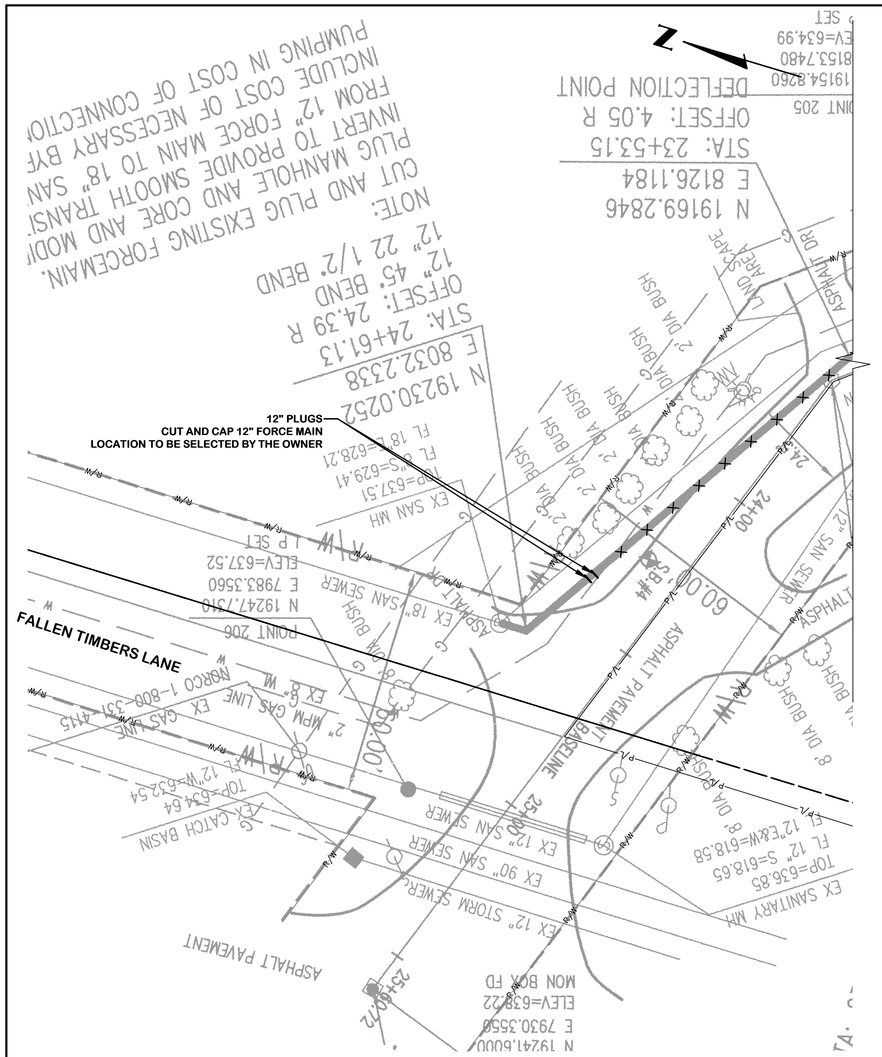

JEROME ROAD

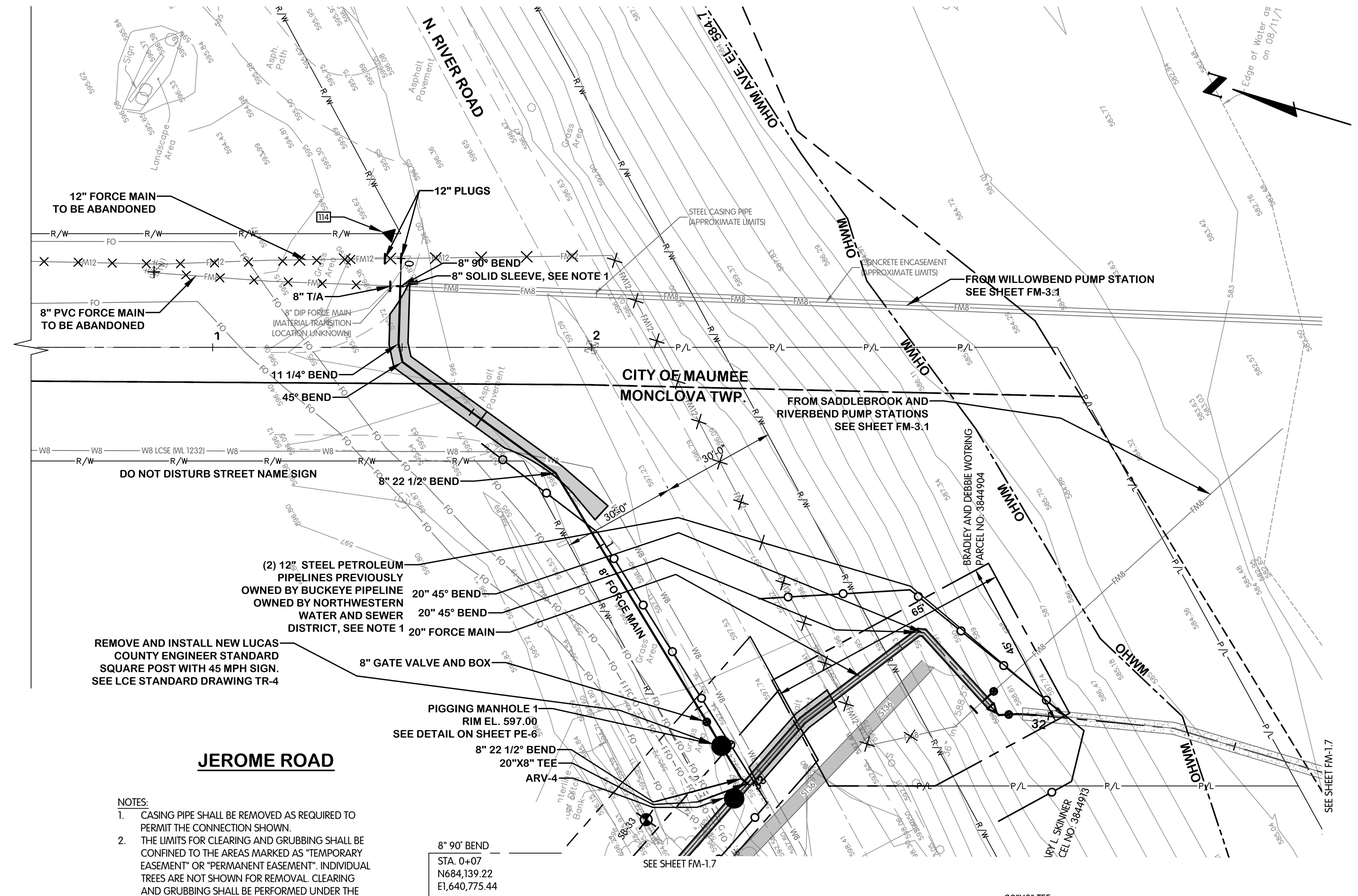

JEROME ROAD

NOTES:

1. CASING PIPE SHALL BE REMOVED AS REQUIRED TO PERMIT THE CONNECTION SHOWN.
2. THE LIMITS FOR CLEARING AND GRUBBING SHALL BE CONFINED TO THE AREAS MARKED AS "TEMPORARY EASEMENT" OR "PERMANENT EASEMENT". INDIVIDUAL TREES ARE NOT SHOWN FOR REMOVAL. CLEARING AND GRUBBING SHALL BE PERFORMED UNDER THE SUPERVISION OF THE OWNER.

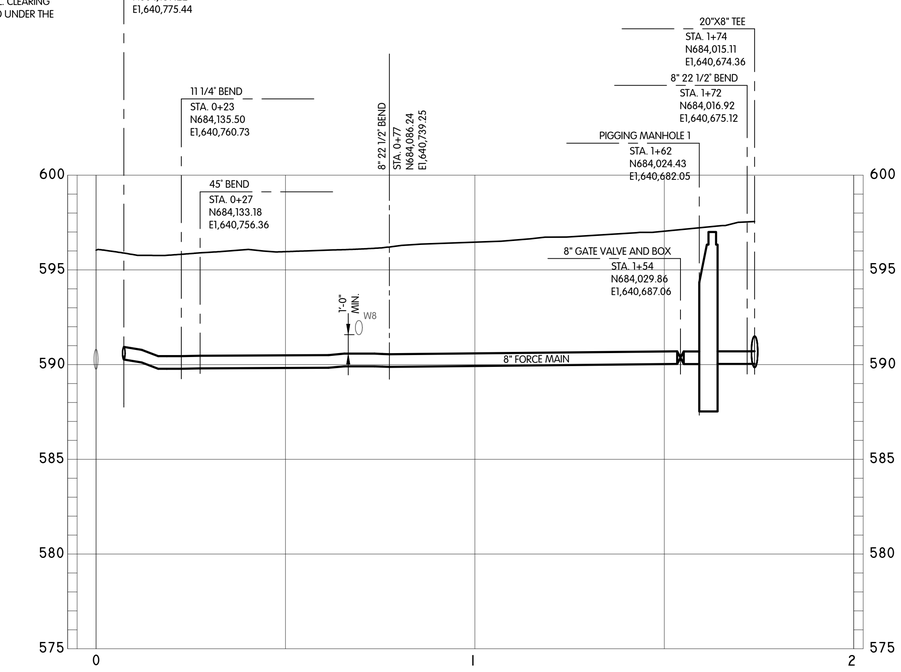

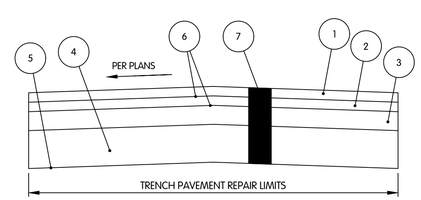

JEROME ROAD REPAIRS TYPICAL SECTION

NTS

1. 1¼" ITEM 441 ASPHALT CONCRETE SURFACE COURSE, TYPE 1, PG 64-22 (448)
2. 1¼" ITEM 441 ASPHALT CONCRETE INTERMEDIATE COURSE, TYPE 2, PG 64-22 (448)
3. 3" ITEM 302 ASPHALT CONCRETE BASE
4. 6" ITEM 304 AGGREGATE BASE
5. ITEM 204 SUBGRADE COMPACTION
6. ITEM 407 TACK COAT 0.055 GAL/SQ.YD.
7. ITEM 203 PAVEMENT EXCAVATION

LEGEND

FULL DEPTH PAVEMENT REPAIRS, SEE TYPICAL SECTION ON THIS SHEET. REPLACE REMOVED PAVEMENT MARKINGS IN KIND TO MEET THE REQUIREMENTS OF ODOT 644.

NORTHWESTERN THE DISTRICT WATER & SEWER

JEROME ROAD
FORCE MAIN
PLAN AND PROFILE
STA. 0+00 TO 2+00

NORTHWESTERN WATER AND SEWER DISTRICT,
WILLOWBEND PUMP STATION IMPROVEMENTS, SS-307

NO.	DATE	REVISIONS AFTER ISSUED FOR BID	BY
3			
2			
1			

Jones & Henry Engineers, Ltd.

Fluid thinking©.
www.JHeng.com

JOB NO.	796-7215.002
SCALE	1" = 20' HOR 1" = 4' VERT

THIS LINE SCALES 1" WHEN PLOTTED TO NOTED SCALE

DESIGNED	DRAWN	CHECKED
TAB	BJD	TAB

STATUS: ISSUED FOR BID
DATE: AUGUST 2021

SHEET NO.
FM-2.1
33 OF 50

TOL-7215002FM21-JEROME ROAD
8/12/2021 11:04 AM BJDILL
8/12/2021 2:52 PM

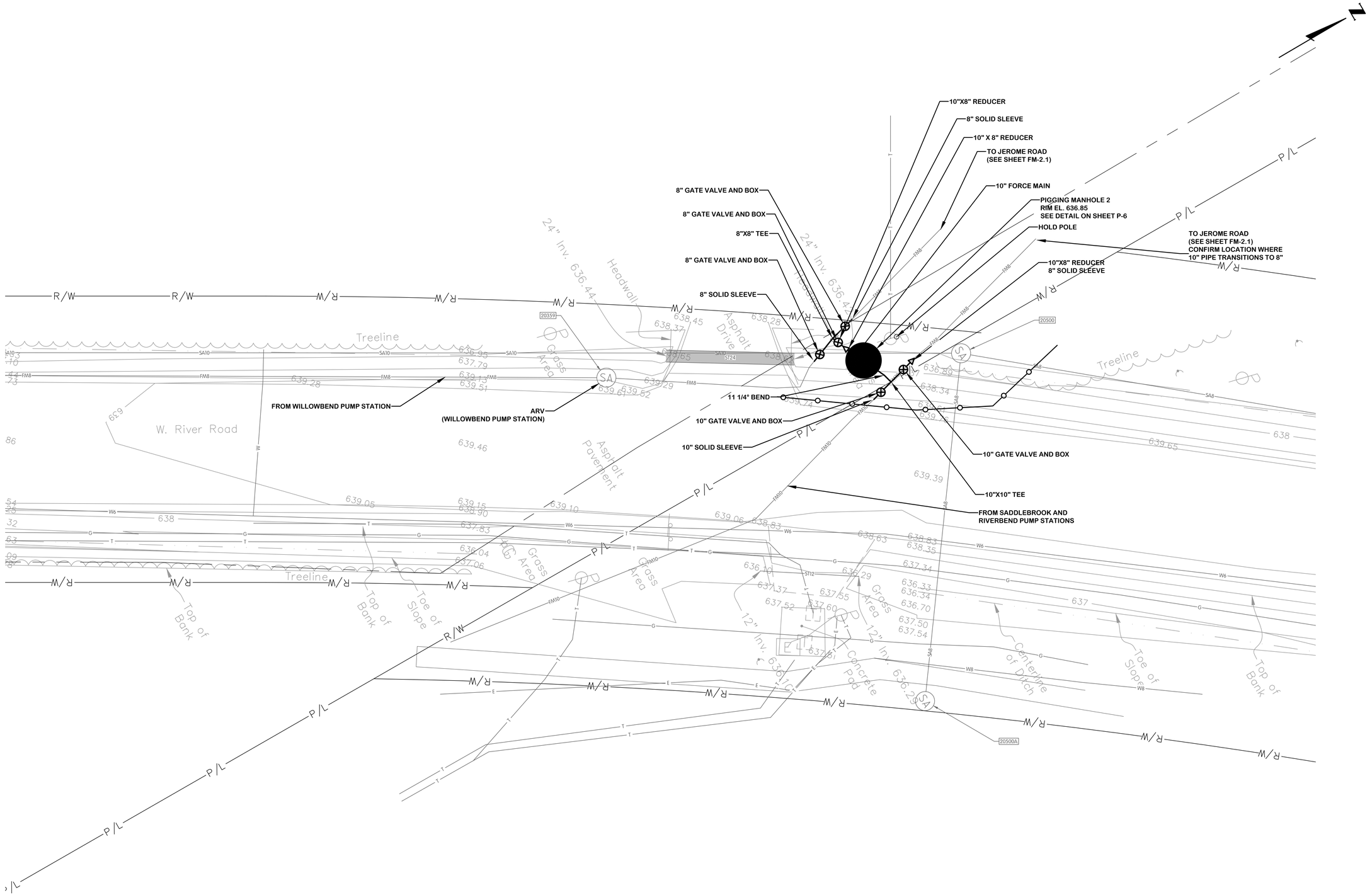

WEST RIVER ROAD

NOTES:

1. THE DISTRICT WILL TURN OFF THE PUMP STATIONS LOCATED UPSTREAM OF THE EXISTING CONNECTION POINTS FOR A PERIOD OF UP TO 4 HOURS FOR EACH CONNECTION. SEE SPECIFICATIONS FOR MORE INFORMATION ON THESE CONNECTIONS.
2. THE LIMITS FOR CLEARING AND GRUBBING SHALL BE CONFINED TO THE RIGHT-OF-WAYS OR AREAS MARKED AS "TEMPORARY EASEMENT" OR "PERMANENT EASEMENT". INDIVIDUAL TREES ARE NOT SHOWN FOR REMOVAL. CLEARING AND GRUBBING SHALL BE PERFORMED UNDER THE SUPERVISION OF THE OWNER.
3. THE DEPTH OF THE PROPOSED FORCEMAIN SHALL BE DETERMINED BASED ON THE DEPTH OF THE EXISTING FORCEMAIN.

NORTHWESTERN THE DISTRICT WATER & SEWER

WEST RIVER ROAD
FORCE MAIN INTERCONNECTION
PLAN
STA. 0+0 TO 5+50

NORTHWESTERN WATER AND SEWER DISTRICT,
WILLOWBEND PUMP STATION IMPROVEMENTS, SS-307

NO.	DATE	REVISIONS AFTER ISSUED FOR BID	BY
5			
4			
3			
2			
1			

Jones & Henry Engineers, Ltd.

Fluid thinking©.
www.JHeng.com

JOB NO. 796-7215.002

SCALE 1"=10'

THIS LINE SCALES 1" WHEN PLOTTED TO NOTED SCALE

DESIGNED	DRAWN	CHECKED
TAB	BJD	TAB

STATUS: ISSUED FOR BID

DATE: AUGUST 2021

SHEET NO.

FM-3.1

34 OF 50

TOL-7215002FM31-WEST RIVER ROAD
8/27/2021 9:54 AM - BDRILL
8/12/2021 2:53 PM

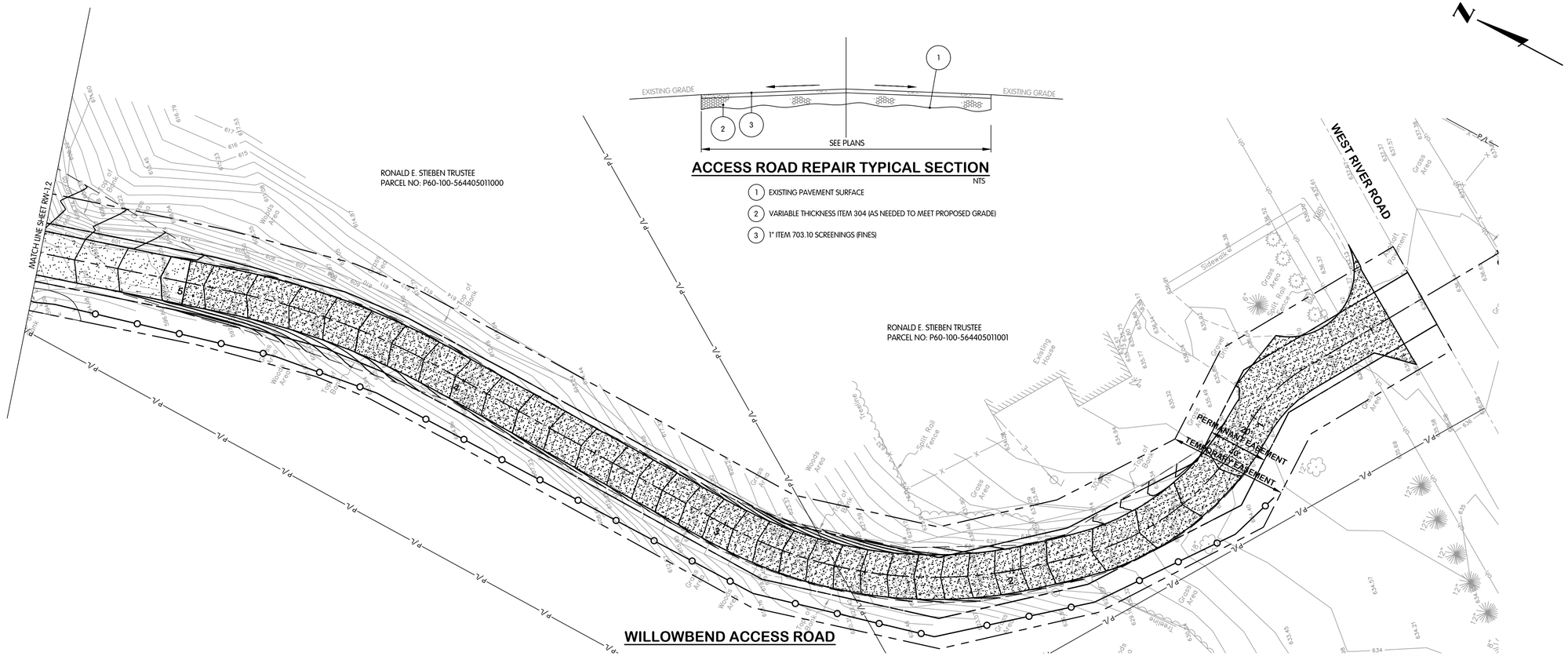
RONALD E. STIEBEN TRUSTEE
PARCEL NO: P60-100-564405011000
MATCH LINE SHEET RW-1.2
RONALD E. STIEBEN TRUSTEE
PARCEL NO: P60-100-564405011001
WEST RIVER ROAD
PERMANENT EASEMENT
TEMPORARY EASEMENT
Existing House
Sidewalk
Grass Area
Woods Area
Top of Bank
Toe of Bank
Split Rail Fence
Trailing Edge
Gravel
Pavement
Curb
Edge of Pavement
Ditch
Culvert
Drainage Ditch
Utility Pole
Fire Hydrant
Mailbox
Tree
Shrub
Fence
Guardrail
Concrete
Asphalt
Driveway
Wetland
Pond
Stream
Contour
Spot Elevation
Property Line
Right of Way
Easement
Building
Foundation
Footer
Wall
Pier
Column
Beam
Slab
Deck
Porch
Stairs
Ramp
Landing
Handrail
Railing
Window
Door
Roof
Chimney
Vent
Antenna
Satellite Dish
Air Conditioner
Generator
Propane Tank
Septic Tank
Leach Field
Well
Cistern
Pump
Valve
Meter
Manhole
Catch Basin
Inlet
Outlet
Culvert
Bridge
Dam
Levee
Spillway
Weir
Gate
Barrier
Guardrail
Signage
Lighting
Power Line
Telephone Line
Cable Line
Fiber Optic Line
Underground Utility
Overhead Utility
Tree Line
Shrub Line
Fence Line

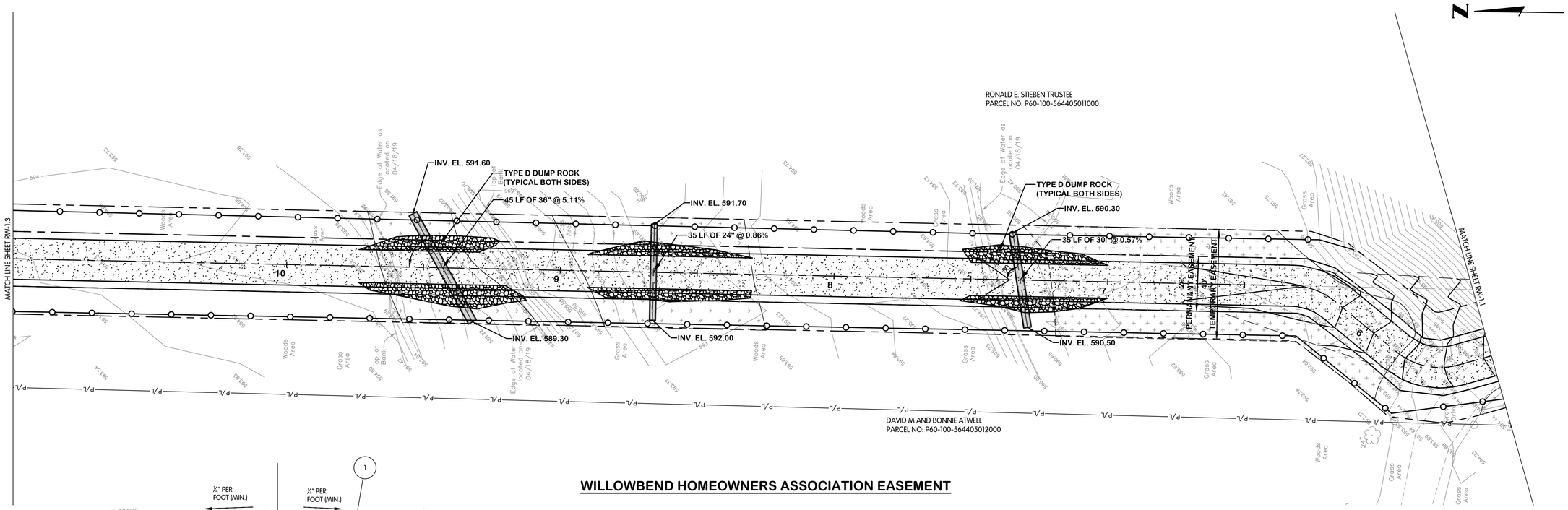

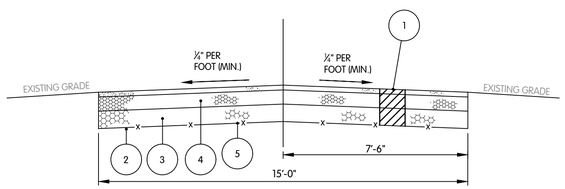

ACCESS ROAD TYPICAL SECTION

NTS

1. ITEM 203 ROADWAY EXCAVATION
2. ITEM 204 SUBGRADE COMPACTION
3. 12" ITEM 703.19 (NO.1 & NO.2 STONE)
4. 3" ITEM 411 AGGREGATE BASE
5. SUBGRADE SUPPORT MATERIAL, SEE SPECIFICATIONS - TO BE USED AT DISCRETION OF THE ENGINEER.

LIMITS OF ACCESS ROADWAY REPAIRS
SEE TYPICAL SECTION ON SHEET RW-1.1

LIMITS OF NEW ACCESS ROADWAY CONSTRUCTION
SEE TYPICAL SECTION ON THIS SHEET.

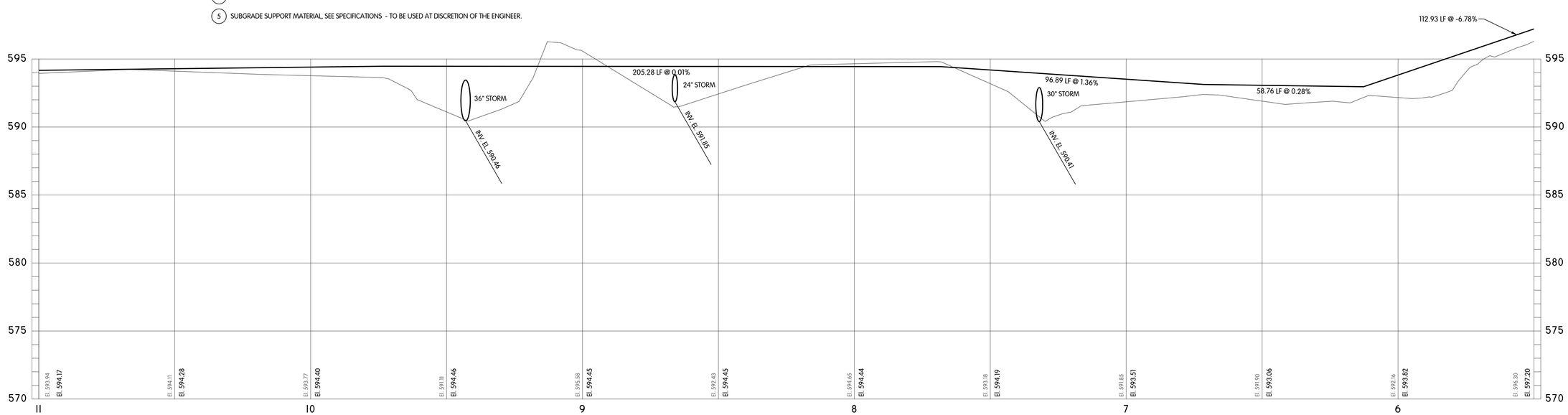

NORTHWESTERN THE DISTRICT WATER & SEWER

WILLOWBEND ACCESS ROAD
ROADWAY
PLAN AND PROFILE
STA. 5+50 TO 11+00

NORTHWESTERN WATER AND SEWER DISTRICT,
WILLOWBEND PUMP STATION IMPROVEMENTS, SS-307

NO.	DATE	REVISIONS AFTER ISSUED FOR BID	BY
5			
4			
3			
2			
1			

Jones & Henry Engineers, Ltd.

Fluid thinking©.
www.JHeng.com

JOB NO.	796-7215.002
SCALE	1"=20' HOR. 1"=4' VERT.

THIS LINE SCALES 1" WHEN PLOTTED TO NOTED SCALE

DESIGNED	DRAWN	CHECKED
TAB	BJD	TAB

STATUS: ISSUED FOR BID

DATE: AUGUST 2021

SHEET NO.

RW-1.2

36 OF 50

TOL-7215002SR10-STA 5+50 TO 11+00
BY:BRIAN.JOHNSON@JHENG.COM
8/26/2021 8:02 AM

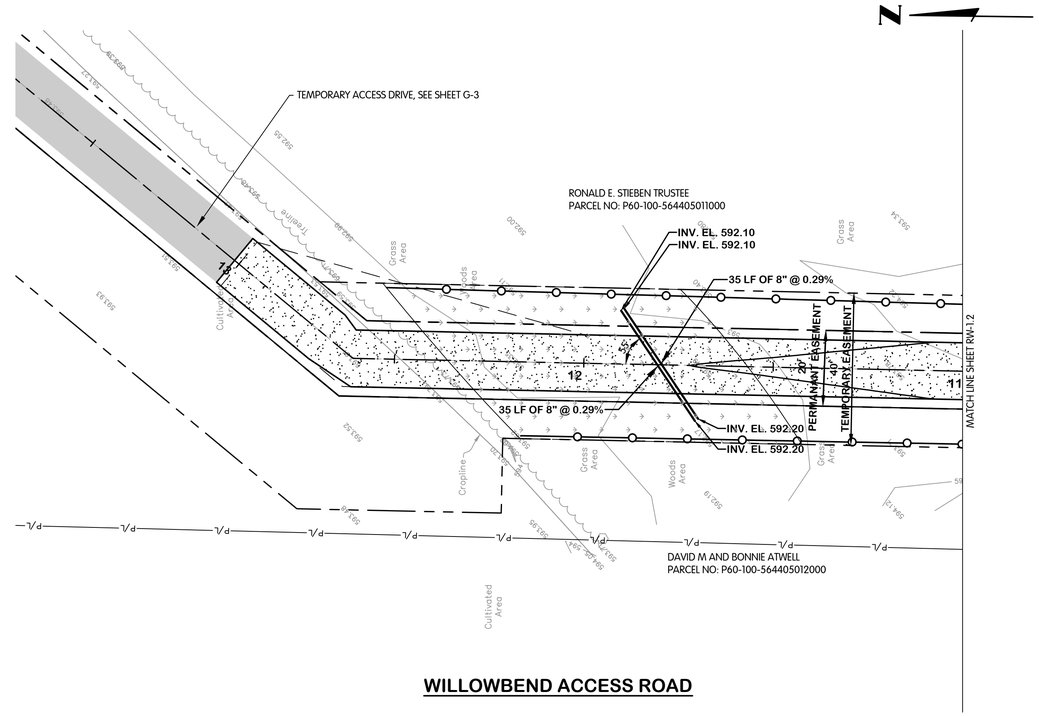

WILLOWBEND ACCESS ROAD

LIMITS OF NEW ACCESS ROADWAY CONSTRUCTION
SEE TYPICAL SECTION ON SHEET RW-1.2

TEMPORARY ACCESS ROAD
SEE SHEET G-3

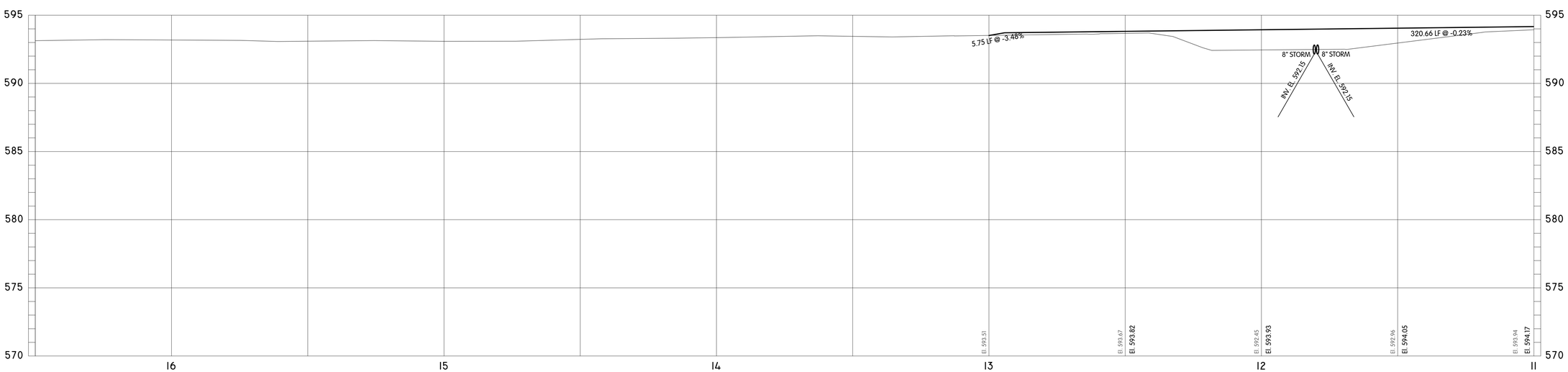

NORTHWESTERN THE DISTRICT WATER & SEWER

WILLOWBEND ACCESS ROAD
ROADWAY
PLAN AND PROFILE
STA. 11+00 TO 16+50

NORTHWESTERN WATER AND SEWER DISTRICT,
WILLOWBEND PUMP STATION IMPROVEMENTS, SS-307

NO.	DATE	REVISIONS AFTER ISSUED FOR BID	BY
5			
4			
3			
2			
1			

Jones & Henry Engineers, Ltd.
Fluid thinking©.
www.JHeng.com

JOB NO. 796-7215.002

SCALE 1"=20' HOR. 1"=4' VERT.

THIS LINE SCALES 1" WHEN PLOTTED TO NOTED SCALE

DESIGNED	DRAWN	CHECKED
TAB	BJD	TAB

STATUS: ISSUED FOR BID

DATE: AUGUST 2021

SHEET NO.
RW-1.3
37 OF 50

TOL-7215002SR3-STA 11+00 TO 13+00
BY BRIAN JOHNSON, JR. - BDRILL
8/12/2021 2:35 PM

AREA SQ.YD.	END WIDTH FT.	
SEED	SEED	
	0	
0		
	0	
0		
	0	
0		
	0	
0		
	0	
0		
	0	
0		
	0	
0		SHEET TOTAL

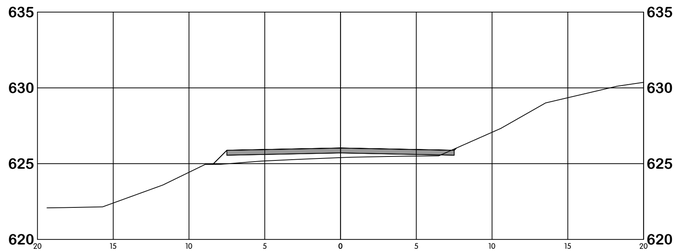

STA. 2+25

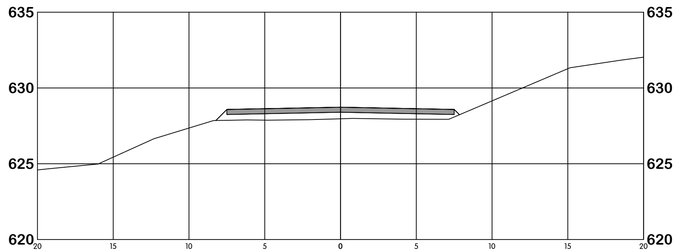

STA. 2+00

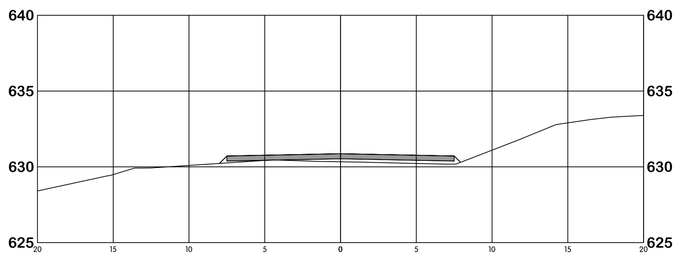

STA. 1+75

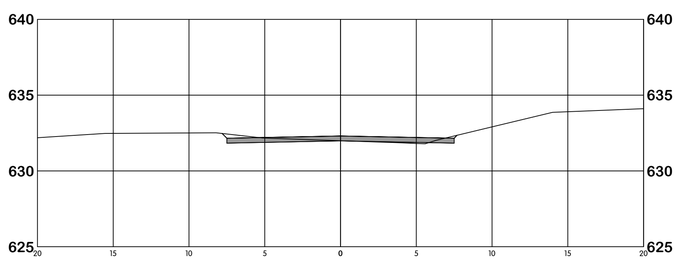

STA. 1+50

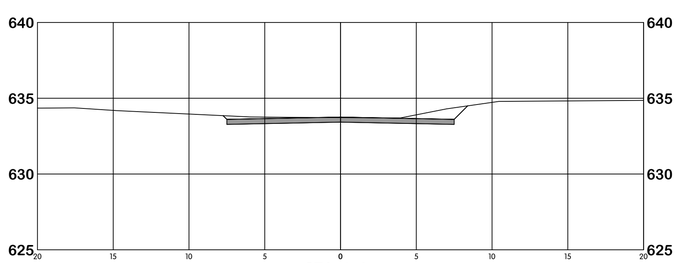

STA. 1+25

END AREA SQ. FT.		VOLUME CU. YD.	
CUT	FILL	CUT	FILL
0	5		
		0	5
0	6		
		0	4
0	2		
		1	1
2	0		
		4	0
7	0		
		3	0
SHEET TOTAL		8	10

AREA SQ.YD.	END WIDTH FT.	
SEED	SEED	
	0	
0		
	0	
0		
	0	
0		
	0	
0		
	0	
0		
	0	
0		
	0	
0		SHEET TOTAL

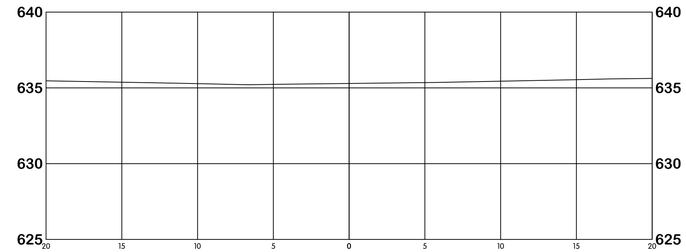

STA. 1+00

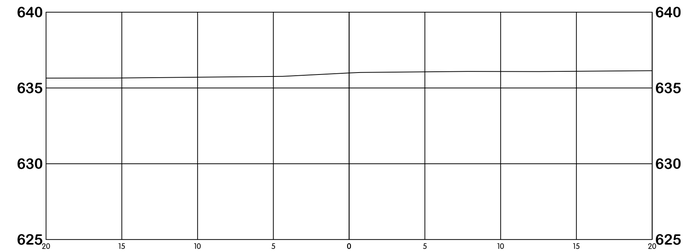

STA. 0+75

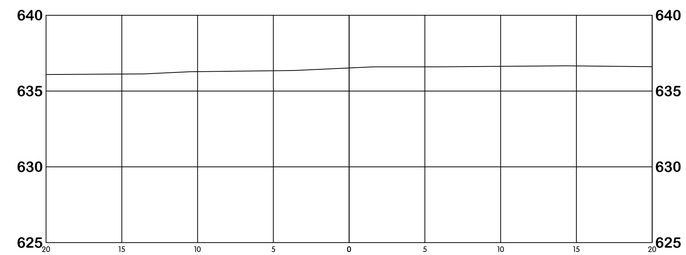

STA. 0+50

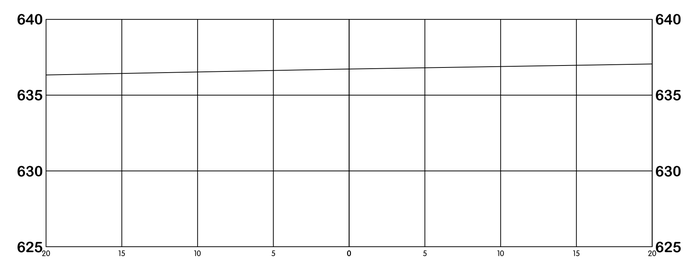

STA. 0+25

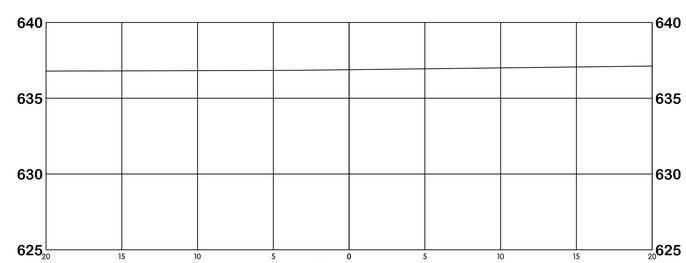

STA. 0+00

END AREA SQ. FT.		VOLUME CU. YD.	
CUT	FILL	CUT	FILL
0	0		
		0	0
0	0		
		0	0
0	0		
		0	0
0	0		
		0	0
0	0		
		0	0
0			
		0	0
SHEET TOTAL		0	0

NORTHWESTERN
THE DISTRICT
WATER & SEWER

WILLOWBEND ACCESS ROAD
CROSS SECTIONS
STA. 0+00 TO 2+25

NORTHWESTERN WATER AND SEWER DISTRICT,
WILLOWBEND PUMP STATION IMPROVEMENTS, SS-307

NO.	DATE	REVISIONS AFTER ISSUED FOR BID	BY
5			
4			
3			
2			
1			

Jones & Henry Engineers, Ltd.

Fluid thinking©.
www.JHeng.com

JOB NO. 796-7215.002

SCALE 1"=5'

THIS LINE SCALES 1" WHEN PLOTTED TO NOTED SCALE

DESIGNED	DRAWN	CHECKED
TAB	BJD	TAB

STATUS: ISSUED FOR BID

DATE: AUGUST 2021

SHEET NO.

CS-1.1

TOL-7215002SH-STA 0+00 TO 2+25
2/09/2021 11:44 AM - BDRILL
8/12/2021 2:56 PM

AREA SQ.YD.	END WIDTH FT.		END AREA SQ. FT.		VOLUME CU. YD.	
SEED	SEED		CUT	FILL	CUT	FILL
	0				0	10
0			0	10		
	0					
					0	7
0			0	5		
	0					
					0	3
			0	2		
0						
					0	2
	0					
			0	3		
0						
					0	5
	0					
			0	7		
0						
					0	7
	0					
0		SHEET TOTAL			0	34

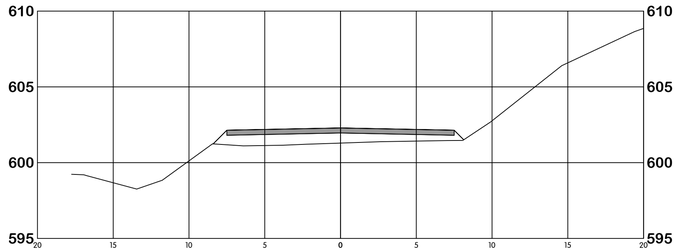

STA. 4+75

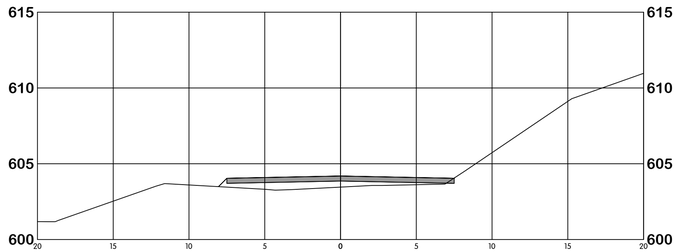

STA. 4+50

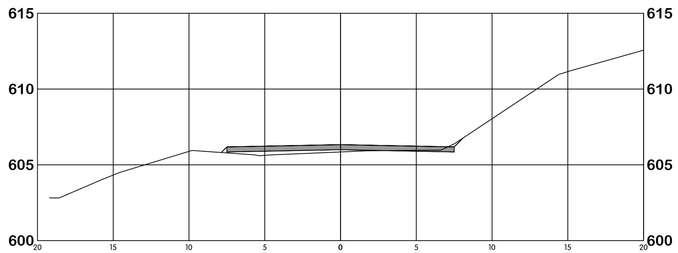

STA. 4+25

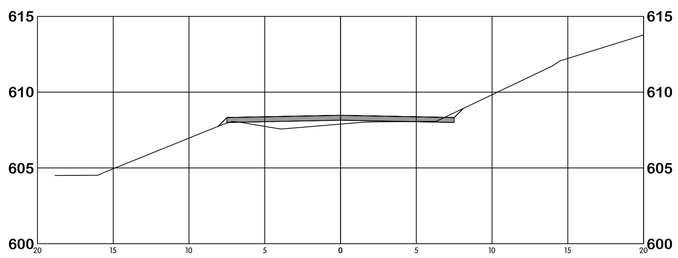

STA. 4+00

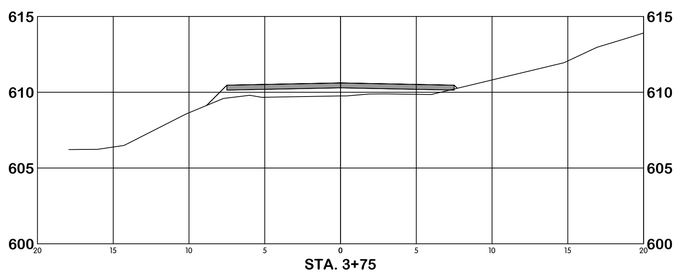

STA. 3+75

AREA SQ.YD.	END WIDTH FT.		END AREA SQ. FT.		VOLUME CU. YD.	
SEED	SEED		CUT	FILL	CUT	FILL
	0					
0			0	7		
	0					
					0	7
0			1	7		
	0					
					1	6
			1	6		
0						
					0	5
	0					
			0	4		
0						
					0	3
	0					
			1	3		
0						
					0	4
	0					
0		SHEET TOTAL			1	25

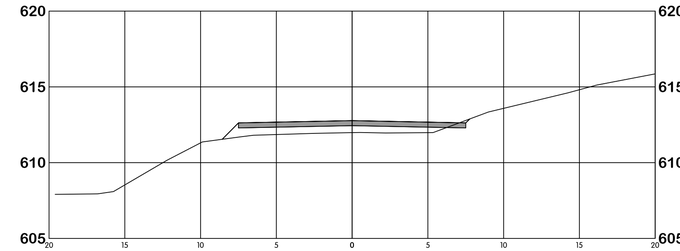

STA. 3+50

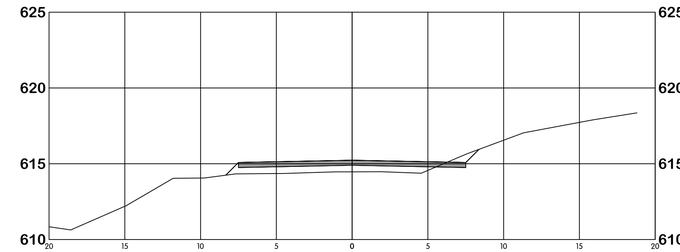

STA. 3+25

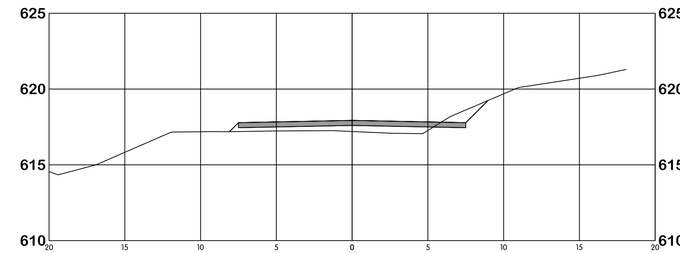

STA. 3+00

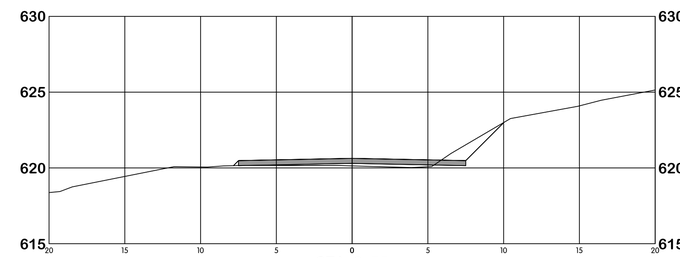

STA. 2+75

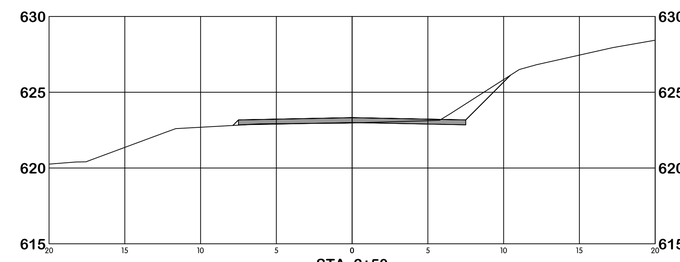

STA. 2+50

NORTHWESTERN THE DISTRICT WATER & SEWER

WILLOWBEND ACCESS ROAD
CROSS SECTIONS
STA. 2+50 TO 4+75

NORTHWESTERN WATER AND SEWER DISTRICT,
WILLOWBEND PUMP STATION IMPROVEMENTS, SS-307

NO.	DATE	REVISIONS AFTER ISSUED FOR BID	BY
5			
4			
3			
2			
1			

Jones & Henry Engineers, Ltd.

Fluid thinking©.
www.JHeng.com

JOB NO. 796-7215.002

SCALE 1"=5'

THIS LINE SCALES 1" WHEN PLOTTED TO NOTED SCALE

DESIGNED	DRAWN	CHECKED
TAB	BJD	TAB

STATUS: ISSUED FOR BID
DATE: AUGUST 2021

SHEET NO.
CS-1.2
39 OF 50

TOL-7215\002\SHS-STA 2+50 TO 4+75
JOB:796-7215.002 / TAB
8/12/2021 2:54 PM - BDALL

AREA SQ.YD.	END WIDTH FT.
SEED	SEED
0	0
0	0
0	0

AREA SQ.YD.	END WIDTH FT.	
SEED	SEED	
0	0	
0	0	
0	0	
0	0	
0	0	
0	0	
0	0	
0		SHEET TOTAL

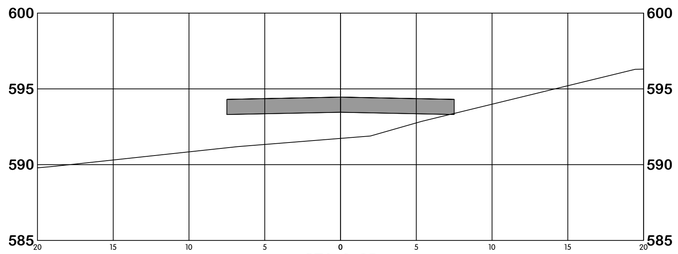

STA. 9+25

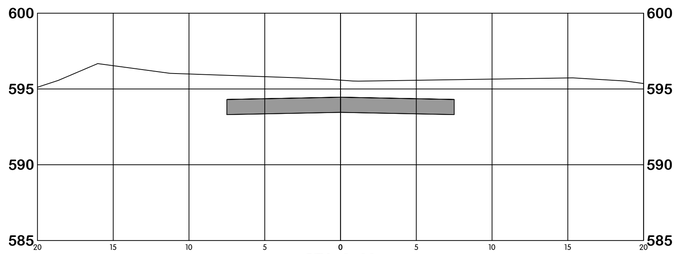

STA. 9+00

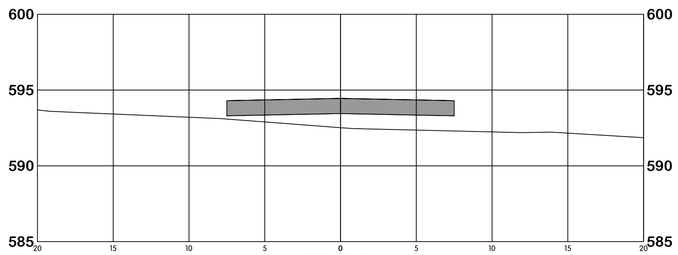

STA. 8+75

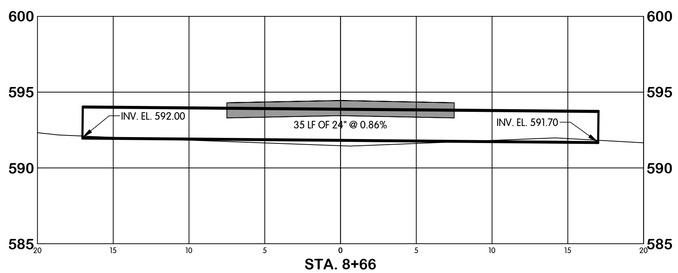

STA. 8+66

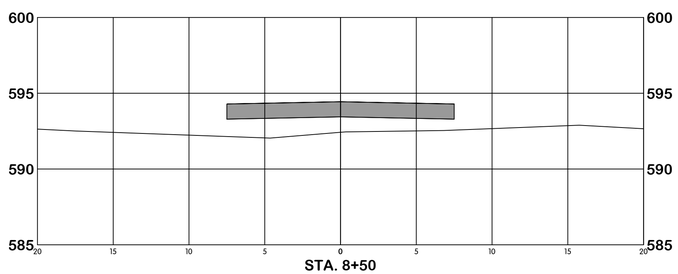

STA. 8+50

END AREA SQ. FT.		VOLUME CU. YD.	
CUT	FILL	CUT	FILL
0	28	0	31
36	0	17	13
0	14	17	6
0	33	0	8
0	19	0	15
		34	73

AREA SQ.YD.	END WIDTH FT.	
SEED	SEED	
0	0	
0	0	
0	0	
0	0	
0	0	
0	0	
0	0	
0		SHEET TOTAL

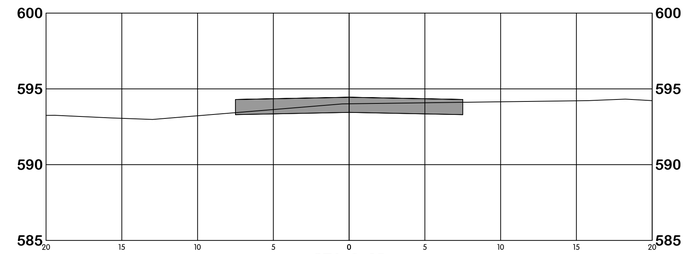

STA. 8+25

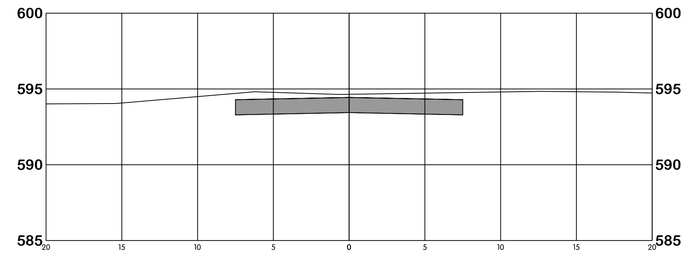

STA. 8+00

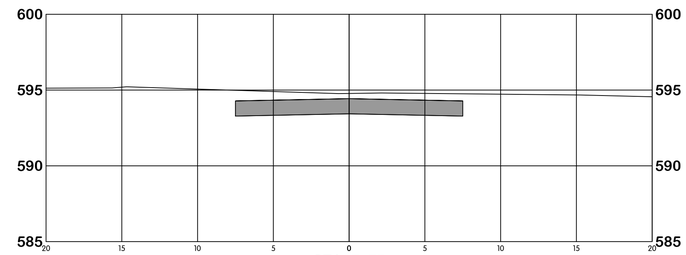

STA. 7+75

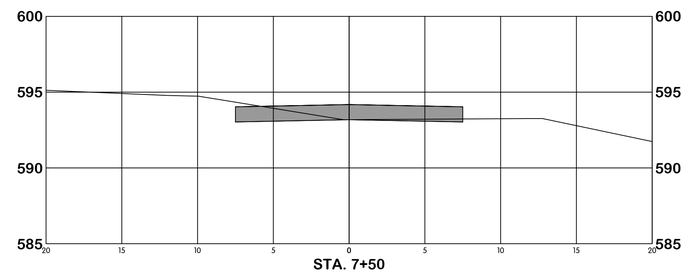

STA. 7+50

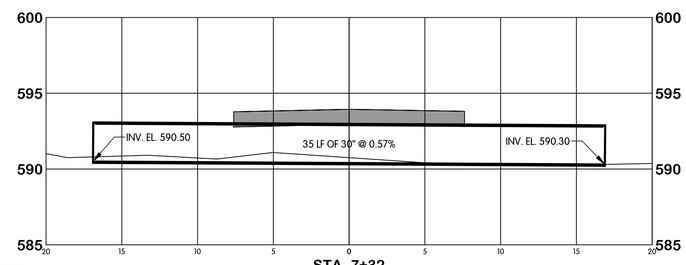

STA. 7+32

END AREA SQ. FT.		VOLUME CU. YD.	
CUT	FILL	CUT	FILL
8	0	4	9
21	0	13	0
22	0	20	0
5	0	13	0
0	44	2	15
		52	24

NORTHWESTERN THE DISTRICT WATER & SEWER

WILLOWBEND ACCESS ROAD CROSS SECTIONS STA. 7+32 TO 9+25

NORTHWESTERN WATER AND SEWER DISTRICT, WILLOWBEND PUMP STATION IMPROVEMENTS, SS-307

NO.	DATE	REVISIONS AFTER ISSUED FOR BID	BY
5			
4			
3			
2			
1			

Jones & Henry Engineers, Ltd.

Fluid thinking©.
www.JHeng.com

JOB NO. 796-7215.002

SCALE 1"=5'

THIS LINE SCALES 1" WHEN PLOTTED TO NOTED SCALE

DESIGNED	DRAWN	CHECKED
TAB	BJD	TAB

STATUS: ISSUED FOR BID

DATE: AUGUST 2021

SHEET NO.

CS-1.4

41 OF 50

TOL-7215\0025\Sla-STA 7+32 TO 9+25
7/01/2021 10:04 AM - BDRILL
8/12/2021 2:57 PM

AREA SQ.YD.	END WIDTH FT.	
SEED	SEED	
0	0	
0	0	
0	0

AREA SQ.YD.	END WIDTH FT.		END AREA SQ. FT.		VOLUME CU. YD.	
SEED	SEED		CUT	FILL	CUT	FILL
0	0					
0	0					
0	0				

SINGLE-LINE DIAGRAM LEGEND

- 30A / FRS-R -30 — FUSED DISCONNECT SWITCH. (SWITCH SIZE, FUSE TYPE AND FUSE SIZE AS SHOWN)
- 30A — UNFUSED DISCONNECT SWITCH (SWITCH SIZE AS SHOWN)
- 40A — THERMAL-MAGNETIC CIRCUIT BREAKER OR MOTOR CIRCUIT PROTECTOR-MCP (TRIP SIZE AS SHOWN)
- CB — HIGH OR MEDIUM VOLTAGE CIRCUIT BREAKER
- 12470 / 1000KVA / 480Y/277V — LIGHTING OR POWER TRANSFORMER,THREE PHASE UNLESS NOTED OTHERWISE (CONNECTION, SIZE & RATING AS SHOWN)
- FULL VOLTAGE NON-REVERSING MOTOR STARTER WITH OVERLOADS (FVNR)
- R / F — FULL VOLTAGE REVERSING MOTOR STARTER WITH OVERLOADS (FVR)
- S / F — TWO SPEED MOTOR STARTER WITH OVERLOADS
- VACUUM CONTACTOR
- 5 — THREE PHASE AC MOTOR (HORSEPOWER AS SHOWN)
- 600/5 AS AM — CURRENT TRANSFORMER WITH AMMETER SWITCH, AND AMMETER (RATIO AS SHOWN)
- 600/5 — CURRENT TRANSFORMER WITH SHORTING BLOCK (RATIO AS SHOWN)
- VS VM — POTENTIAL TRANSFORMER WITH VOLTMETER SWITCH, AND VOLTMETER
- 6KV — LIGHTNING ARRESTER (VOLTAGE RATING AS SHOWN)
- TRANSIENT VOLTAGE SURGE SUPPRESSOR (TVSS)
- GROUND CONNECTION
- LINE OR LOAD REACTOR
- K — KIRK KEY (DASHED LINES TO INTERLOCKED DEVICES)
- DRAWOUT FOR SWITCHGEAR OR MOTOR CONTROL CENTER
- POWER FACTOR CORRECTION CAPACITOR - (PFCC) (SIZE PER MOTOR MANUFACTURER RECOMMENDATIONS.)
- 100E — HIGH OR MEDIUM VOLTAGE FUSED CUTOUT (SIZE AS SHOWN)
- 4/0 — CABLE LIMITER (SIZE AS SHOWN)
- G 450KW 800A — STAND-BY GENERATOR (SIZE AS SHOWN) WITH FIELD PROTECTION CIRCUIT BREAKER (TRIP SIZE AS SHOWN)
- VFD BP — VARIABLE FREQUENCY DRIVE WITH A BY-PASS OPTION (SHOWN WITH INTEGRAL EXTERNAL DISCONNECT HANDLE)
- CP = CONTROL PANEL
  SSRVS = SOLID STATE REDUCED VOLTAGE STARTER
  (SHOWN WITH INTEGRAL EXTERNAL DISCONNECT HANDLE)
- DPM — DIGITAL POWER METER
- WHM — WATTHOUR METER
- AUTOMATIC TRANSFER SWITCH (ATS)
- MANUAL TRANSFER SWITCH (MTS)

SCHEMATIC LEGEND

- OPEN CONTACTS WITH TIME-DELAY CLOSING
- CLOSED CONTACTS WITH TIME-DELAY OPENING
- OPEN CONTACTS WITH TIME-DELAY OPENING
- CLOSED CONTACTS WITH TIME-DELAY CLOSING
- FLOW SWITCH CLOSES ON INCREASE IN FLOW
- FLOW SWITCH OPENS ON INCREASE IN FLOW
- LIQUID LEVEL SWITCH CLOSES ON RISING LEVEL
- LIQUID LEVEL SWITCH OPENS ON RISING LEVEL
- PRESSURE OR VACUUM SWITCH CLOSES ON RISING PRESSURE
- PRESSURE OR VACUUM SWITCH OPENS ON RISING PRESSURE
- TEMPERATURE SWITCH CLOSES ON RISING TEMPERATURE
- TEMPERATURE SWITCH OPENS ON RISING TEMPERATURE
- LIMIT SWITCH NORMALLY OPEN
- LIMIT SWITCH NORMALLY OPEN - HELD CLOSED
- LIMIT SWITCH NORMALLY CLOSED
- LIMIT SWITCH NORMALLY CLOSED - HELD OPEN
- FOOT SWITCH OPENS BY FOOT PRESSURE
- FOOT SWITCH CLOSES BY FOOT PRESSURE
- MUSHROOM HEAD, MAINTAINED ACTION (PUSH-PULL) PUSH BUTTON SWITCH (SHOWN WITH ONLY 1 CIRCUIT)
- ON OFF XO — 2 - POSITION, MAINTAINED ACTION SELECTOR SWITCH
- H O A XOO OOX — 3 - POSITION, MAINTAINED ACTION SELECTOR SWITCH
  H - O - A: HAND-OFF-AUTOMATIC
  L - O - R: LOCAL-OFF-REMOTE
  PCS: PLANT CONTROL SYSTEM
  PLC: PROGRAMMABLE LOGIC CONTROLLER
- INDICATES ITEMS IN A SEPARATE COMMON ENCLOSURE
- XY — CONTACTOR COIL M - MOTOR STARTER
  CONTACTOR MF - MOTOR STARTER FORWARD
  CONTACTOR MR - MOTOR STARTER REVERSE
  CONTACTOR ML - MOTOR STARTER LOW SPEED
  CONTACTOR MH - MOTOR STARTER HIGH SPEED
  CONTACTOR SC - MOTOR STARTER STARTING
  CONTACTOR RC - MOTOR STARTER RUN
  CONTACTOR BP - BYPASS CONTACTOR
  CC - CAPACITOR CONTACTOR
  LC - LIGHTING CONTACTOR
  IC - ISOLATION CONTACTOR
  C - GENERAL CONTACTOR
- XR — CONTROL RELAY COIL
  CR - INSTANTANEOUS CONTROL RELAY
  TR - TIME DELAY RELAY
- OL — MOTOR STARTER OVERLOAD RELAY N.C. CONTACT
- SOLENOID COIL
  SV - SOLENOID VALVE
- ETM — ELAPSED TIME METER
- NORMALLY OPEN MOMENTARY ACTION PUSHBUTTON SWITCH (SHOWN WITH ONLY 1 CIRCUIT)
- NORMALLY CLOSED MOMENTARY ACTION PUSHBUTTON SWITCH (SHOWN WITH ONLY 1 CIRCUIT)
- R — PUSH-TO-TEST PILOT LIGHT WITH COLORED LENS CAP
  R - RED
  G - GREEN
  A - AMBER
  W - WHITE
  B - BLUE
  CL - CLEAR
- F — ZERO SPEED SWITCH (NORMALLY OPEN)
- F — ZERO SPEED SWITCH (NORMALLY CLOSED)

GENERAL ELECTRICAL ABBREVIATIONS

PVC - POLYVINYL CHLORIDE
RGS - RIGID GALVANIZED STEEL
PVC/RGS - PVC COATED RGS

MOTOR STARTER ABBREVIATIONS

FVNR - FULL VOLTAGE, NON-REVERSING
FVR - FULL VOLTAGE REVERSING
TS1W - TWO SPEED, ONE WINDING
TS2W - TWO SPEED, TWO WINDING
TSR1W - TWO SPEED REVERSING, ONE WINDING
TSR2W - TWO SPEED REVERSING, TWO WINDING

ELECTRICAL PLAN LEGEND

- GROUND WIRE
- DIRECT BURIAL CABLE
- CONDUIT CONCEALED
- CONDUIT EXPOSED
- CONDUIT IN CONCRETE DUCT BANK
- HOMERUN
- CONDUIT TURNS UP
- CONDUIT TURNS DOWN
- CAPPED CONDUIT (FUTURE USE)
- CONDUIT TEE
- CADWELD CONNECTION
- B B — B = BUSWAY
- C C — C = CABLE TRAY
- S — SINGLE POLE TOGGLE SWITCH
- S_2 — DOUBLE POLE TOGGLE SWITCH
- S_3 — THREE-WAY TOGGLE SWITCH
- S_4 — FOUR-WAY TOGGLE SWITCH
- S_P — TOGGLE SWITCH WITH GREEN PILOT LIGHT
- S_K — KEY-OPERATED SWITCH
- 5 — SINGLE RECEPTACLE
- 3 — DUPLEX RECEPTACLE
- 5 — RECEPTACLE, (SINGLE) 120,30A.OR LARGER
- 6,8 — RECEPTACLE, (SINGLE) 240V,2POLE
- 4,6,8 — POWER RECEPTACLE 480V,3PH WITH DISCONNECT SWITCH (SIZE AS SHOWN)
- TELEPHONE RECEPTACLE
- COMPUTER RECEPTACLE
- B — BOLLARD LIGHT FIXTURE
- B 2 — CEILING MOUNTED FIXTURE
- C 1 — WALL MOUNTED FIXTURE
- D 1 — POLE MOUNTED FIXTURE
- A 2 — FLUORESCENT FIXTURE
- A 2 — FLUORESCENT TROFFER - GRID CEILING LAY IN
- E — EMERGENCY LIGHTING FIXTURE, (2-HEAD SHOWN)
- EXIT FIXTURE (WITH DIRECTION ARROW WHERE INDICATED)
- MCC — MOTOR CONTROL CENTER (MCC) OR SWITCHGEAR (SWG)
- DISTRIBUTION PANEL 480V OR 480Y/277V
- LIGHTING PANEL 120/208V OR 120/240V
- UPS — UNINTERRUPTIBLE POWER SUPPLY
- EPP — EMERGENCY POWER PACK
- CP — CONTROL PANEL (SHOWN WITH EXTERNAL DISCONNECT HANDLE)
- MAGNETIC MOTOR STARTER 480V, 3 PHASE
- MAGNETIC MOTOR STARTER 120V, 1 PHASE
- COMBINATION MAGNETIC MOTOR STARTER 480V, 3 PHASE
- COMBINATION MAGNETIC MOTOR STARTER 120V, 1 PHASE
- S_M — MANUAL MOTOR STARTER 480V, 3 PHASE
- S_V — MANUAL MOTOR STARTER 120V, 1 PHASE
- DISCONNECT SWITCH (SEE SINGLE LINE DIAGRAM FOR SIZE & TYPE)
- X — SINGLE PHASE AC MOTOR(HORSEPOWER AS SHOWN,DC INDICATES DC MOTOR)
- 2 — THREE PHASE AC MOTOR(HORSEPOWER AS SHOWN)
- MOTOR OPERATED VALVE, 3 PHASE,WITH MAGNETIC STARTER AND CONTROLS
- MOTOR OPERATED VALVE, 1 PHASE,WITH MAGNETIC STARTER AND CONTROLS
- GROUND ROD WITH CADWELD CONNECTION
- PP — PP= POWER POLE, LP = LIGHT POLE
- AIR TERMINAL (LIGHTNING PROTECTION)
- F — STROBE LIGHT (F=FIRE ALARM, G=GAS ALARM)
- R/F — HEAT DETECTOR - RATE OF RISE/FIXED TEMPERATURE
- P — SMOKE DETECTOR - (P = PHOTOELECTRIC, I = IONIZATION)
- F — PULL STATION - FIRE ALARM
- HORN, BELL, OR SIREN
- HORN/STROBE COMBINATION
- CA — CAPACITOR
- CONTROL STATION
- JB — BOX - J UNCTION, T ERMINAL, P ULL OR H AND HOLE
- M — ELECTRIC MANHOLE
- XF — TRANSFORMER (SEE SINGLE LINE FOR SIZE & TYPE)
- LC — LIGHTING CONTACTOR
- FT — FLOW TRANSMITTER
- LT — LEVEL TRANSMITTER
- PT — PRESSURE TRANSMITTER
- TT — TEMPERATURE TRANSMITTER
- AT — ANALYSIS TRANSMITTER (I.E. OXYGEN, TURBIDITY)
- PI — INDICATOR - P RESSURE, F LOW, L EVEL, D ENSITY, A NALYSIS
- DT — DENSITY TRANSMITTER
- ZS — LIMIT (POSITION) SWITCH
- PS — PRESSURE SWITCH
- TS — TEMPERATURE SWITCH (I.E. MOTOR THERMO PROTECTOR)
- CS — CONVEYOR CABLE SWITCH
- SS — SPEED SWITCH
- FS — FLOW SWITCH
- LS — LEVEL SWITCH
- NS — MOISTURE SWITCH
- OS — TORQUE SWITCH
- VS — VIBRATION SWITCH
- LC — LOAD CELL
- LE — L EVEL, F LOW, D ENSITY, P RESSURE, A NALYSIS TRANSMITTER SENSING ELEMENT -
- S — SOLENOID
- T — THERMOSTAT
- H — HEATER IN MOTOR
- PC — PHOTOELECTRIC CELL
- G — GAS DETECTOR WITH CONTROL PANEL (GAS TYPE AS SHOWN)
- T — THERMOCOUPLE
- V — PNEUMATIC VALVE OPERATOR
- I — CURRENT TO PRESSURE TRANSDUCER

ELECTRICAL NOTES

1. STRUCTURAL MATERIALS ARE NOT SHOWN ON ELECTRICAL DRAWINGS. REFER TO ARCHITECTURAL AND STRUCTURAL DRAWINGS.
2. ALL ELECTRICAL EQUIPMENT ELEVATIONS SHOWN ARE TO BOTTOM OF DEVICE OR PANEL, UNLESS OTHERWISE NOTED.
3. NUMBER SHOWN (I.E.11735), INDICATES A SPECIFICATION REFERENCE FOR ITEMS OTHER THAN DIVISION 16. THE ELECTRICAL ITEM UNDER THIS REFERENCE IS SUPPLIED BY ANOTHER PART OF THE CONTRACT. UNLESS OTHERWISE NOTED IN THAT SPECIFICATION, THE CONTRACTOR SHALL INSTALL AND WIRE THE ITEM PER THE DRAWINGS AND DIVISION 16 SPECIFICATIONS.
4. CONTROL WIRING SHALL CONFORM TO ALL REQUIREMENTS AS SHOWN ON THE P & ID DRAWINGS WHETHER SHOWN ON THE ELECTRICAL DRAWINGS OR NOT.
5. WHERE LINES ARE SHOWN CONNECTING ELECTRICAL EQUIPMENT, THEY ARE NOT INTENDED AS CONDUIT ROUTING. CONTRACTOR SHALL ROUTE ALL CONDUIT RUNS (SHOWN OR NOT) PER DIVISION 16 SPECIFICATIONS.
6. WP INDICATES WATERPROOF. LETTER ON OR NEXT TO LIGHT FIXTURE INDICATES TYPE, PER SECTION 16510. NUMBER WITH LIGHT FIXTURE OR RECEPTACLE INDICATES CIRCUIT NUMBER.
7. GFCI INDICATES A CIRCUIT BREAKER OR RECEPTACLE WITH A 6 MA GROUND FAULT CIRCUIT INTERRUPTER. GFEPD INDICATES A CIRCUIT BREAKER OR RECEPTACLE WITH A 30 MA GROUND FAULT EQUIPMENT PROTECTION DEVICE.
8. FOR BELOW GRADE CONDUIT PENETRATIONS THROUGH EXISTING EXTERIOR CONCRETE WALLS, PROVIDE TYPE A CONDUIT SLEEVE FOR PVC CONDUIT. FOR RGS OR PVC-COATED RGS CONDUIT, PROVIDE TYPE B CONDUIT SLEEVE THROUGH CONCRETE WALLS, AND TYPE C CONDUIT SLEEVE THROUGH EXISTING CONCRETE WALLS.
9. FOR ABOVE GRADE CONDUIT PENETRATIONS THROUGH EXTERIOR CONCRETE WALLS, PROVIDE TYPE C CONDUIT SLEEVE. FOR MASONRY WALLS PROVIDE TYPE F CONDUIT SLEEVE.
10. FOR CONDUIT PENETRATIONS THROUGH EXISTING CONCRETE FLOORS AND WALLS BETWEEN ADJACENT NON-CLASSIFIED (NON-HAZARDOUS) AREAS, PROVIDE TYPE C CONDUIT SLEEVES FOR ALL CONDUIT TYPES. FOR SIMILAR PENETRATIONS THROUGH CONCRETE FLOORS AND WALLS, PROVIDE TYPE D CONDUIT SLEEVES FOR ALL CONDUIT TYPES.
11. FOR CONDUIT PENETRATIONS THROUGH CONCRETE FLOORS AND WALLS SEPARATING CLASSIFIED (HAZARDOUS) AREAS FROM NON-CLASSIFIED (NON-HAZARDOUS) AREAS, PROVIDE TYPE G CONDUIT SLEEVES. FOR SIMILAR PENETRATIONS THROUGH MASONRY WALLS, PROVIDE TYPE H CONDUIT SLEEVE. FOLLOW MECHANICAL SEAL MANUFACTURER'S RECOMMENDATIONS TO MEET 3-HOUR FIRE RESISTANCE REQUIREMENTS.
12. LEGENDS ARE FOR REFERENCE ONLY AND DOES NOT MEAN THAT ALL ITEMS ARE USED.

NORTHWESTERN THE DISTRICT WATER & SEWER

ELECTRICAL LEGEND

NORTHWESTERN WATER AND SEWER DISTRICT,
WILLOWBEND PUMP STATION IMPROVEMENTS, SS-307

NO.	DATE	REVISIONS AFTER ISSUED FOR BID	BY
5			
4			
3			
2			
1			

Jones & Henry Engineers, Ltd.
Fluid thinking©.
www.JHeng.com

JOB NO. 796-7215.002
SCALE NONE
THIS LINE SCALES 1" WHEN PLOTTED TO NOTED SCALE

DESIGNED	DRAWN	CHECKED
PEM	BJD	TAB

STATUS: ISSUED FOR BID
DATE: AUGUST 2021
SHEET NO.
E-1
44 OF 50

TOL-7215\002E1-ELECTRICAL LEGEND
7/01/2021 2:29 PM - PWORLEY
8/12/2021 2:55 PM

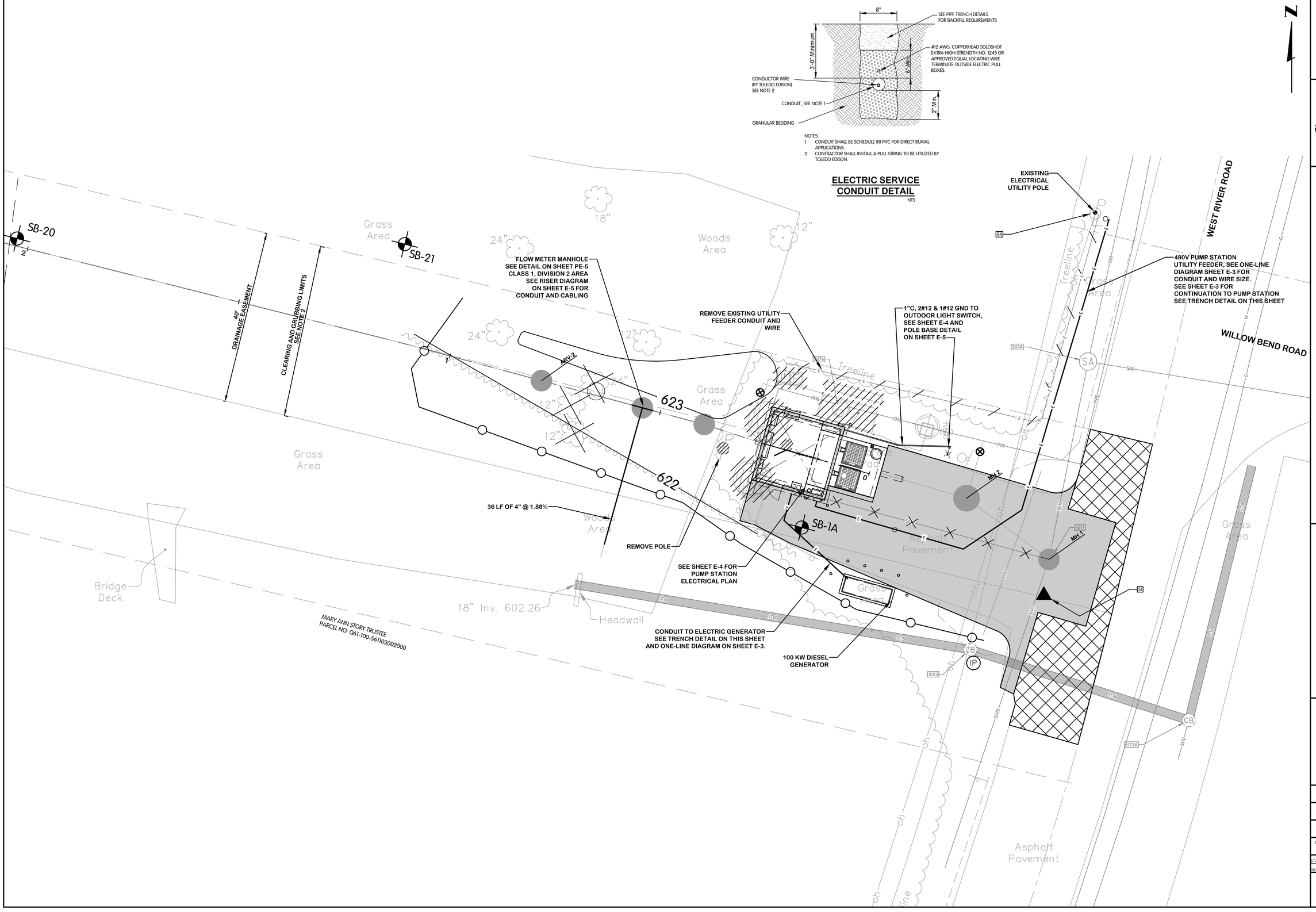

NOTES:
1. CONDUIT SHALL BE SCHEDULE 80 PVC FOR DIRECT BURIAL APPLICATIONS.
2. CONTRACTOR SHALL INSTALL A PULL STRING TO BE UTILIZED BY TOLEDO EDISON.

ELECTRIC SERVICE CONDUIT DETAIL

NTS

NORTHWESTERN THE DISTRICT WATER & SEWER

ELECTRICAL SITE PLAN

NORTHWESTERN WATER AND SEWER DISTRICT, WILLOWBEND PUMP STATION IMPROVEMENTS, SS-307

NO.	DATE	REVISIONS AFTER ISSUED FOR BID	BY
5			
4			
3			
2			
1			

Jones & Henry Engineers, Ltd.

Fluid thinking©.
www.JHeng.com

JOB NO. 796-7215.002

SCALE 1"=10'

THIS LINE SCALES 1" WHEN PLOTTED TO NOTED SCALE

DESIGNED	DRAWN	CHECKED
PEM	BJD	TAB

STATUS: ISSUED FOR BID

DATE: AUGUST 2021

SHEET NO.

E-2

45 OF 50

TOL-7215002\E2-ELECTRICAL SITE PLAN
8/13/2021 9:14 AM BDRILL
8/13/2021 6:53 AM

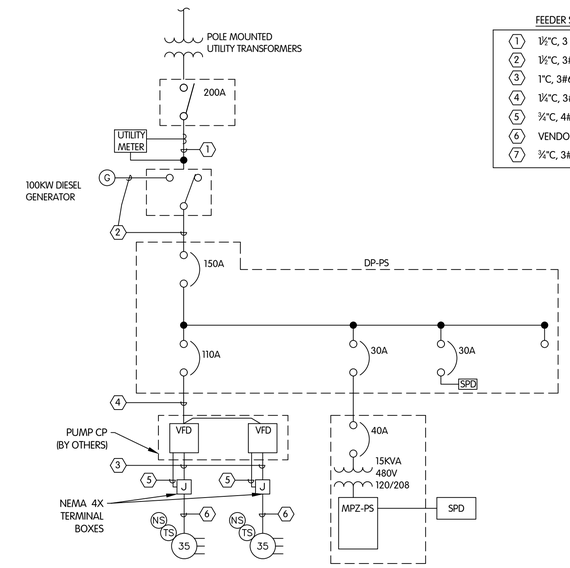

FEEDER SCHEDULE

1	1½"C, 3 1/0 & 1#6 GND
2	1½"C, 3#1/0 & 1#6 GND
3	1"C, 3#6 & 1#10 GND
4	1¼"C, 3#2 & 1#8 GND
5	¾"C, 4#14 & 1#12 GND
6	VENDOR CABLE
7	¾"C, 3#10 & 1#10 GND

PANELBOARD DESIGNATION / TAG: MPZ-PS 15KVA
LOCATION: WILLOW BEND PUMP STATION BUILDING
ELECTRICAL CHARACTERISTICS: 120/208v - 3ph - 4w
FEEDER SIZE: 30A - 3#10 & 1#10 Gnd - 3/4"C
PANELBOARD CONSTRUCTION:
FED FROM: DP-PS

40	PRIMARY CIRCUIT BREAKER	10k	A.I.C. (FULLY RATED)	SURFACE	MOUNTING
60	SECONDARY CIRCUIT BREAKER	100	% NEUTRAL (SOLID)	NEMA 12	ENCLOSURE
30	AVAILABLE CIRCUIT SPACES	TOP	INCOMING FEED		MISC.

Options:

	SUB-FEED LUGS		MULTIPLE SECTIONS
	SUB-FEED BREAKER	EXTERNAL	SPD
	FEED-THRU LUGS	BOLT-ON	BREAKERS
	SERVICE ENTRANCE RATED	UP TO 500 kcmil	MAIN TERMINAL LUGS

'L' After the circuit no. indicates handle locking device.

	LOAD DESCRIPTION	VOLT AMPS A	VOLT AMPS B	VOLT AMPS C	CIRCUIT POLE	CIRCUIT AMP	WIRE SIZE		CIRCUIT AMP	CIRCUIT POLE	VOLT AMPS A	VOLT AMPS B	VOLT AMPS C	LOAD DESCRIPTION	
1	LIGHTS	200			1	20	#12	#12	20	1	800			RECEPTACLES	2
3	FLOW MMETER TRANSMITTER		100		1	15	#12	#12	20	1		1500		RTU PANEL	4
5	SPARE				1	20	#12	#12	15	2			750	GENERATOR BLOCK HEATER	6
7	EXHAUST FAN	900			1	20	#12	#12			750				8
9	PTAC/HVAC		2500		2	40	#8		20	1				SPARE	10
11				2500			#8		20	1				SPARE	12
13	GENERATOR CHARGER	1200			1	20	#12		20	1				SPARE	14
15	SPARE				1	20			20	1				SPARE	16
17	SPARE				1	20			20	1				SPARE	18
19	SPD				3	30	#10		20	1				SPARE	20
21							#10		20	1				SPARE	22
23							#10		20	1				SPARE	24
25															26
27															28
29															30
31															32
33															34
35															36
37															38
39															40
41															42
	SUB TOTAL VA	2,300	2,600	2,500							1,550	1,500	750	**SUB TOTAL VA**	

PHASE TOTALS	**A**	**B**	**C**		
TOTAL PHASE VA	3,850	4,100	3,250	31.1	**CONNECTED AMPS (Balanced)**
TOTAL PHASE AMPS	32	34	27		**PHASE DEMAND AMPS (Balanced)**
TOTAL CONNECTED KVA	11.2				**TOTAL DEMAND KVA**

NORTHWESTERN
THE DISTRICT
WATER & SEWER

ELECTRICAL SINGLE LINE

NORTHWESTERN WATER AND SEWER DISTRICT,
WILLOWBEND PUMP STATION IMPROVEMENTS, SS-307

NO.	DATE	REVISIONS AFTER ISSUED FOR BID	BY
5			
4			
3			
2			
1			

Jones & Henry Engineers, Ltd.
Fluid thinking©.
www.JHeng.com

JOB NO. 796-7215.002
SCALE NONE
THIS LINE SCALES 1" WHEN PLOTTED TO NOTED SCALE

DESIGNED	DRAWN	CHECKED
PEM	BJD	TAB

STATUS: ISSUED FOR BID
DATE: AUGUST 2021
SHEET NO.
E-3
46 OF 50

TOL-7215002E-ELECTRICAL SINGLE LINE
2/17/2021 12:29 PM - RWORLEY
8/12/2021 2:59 PM

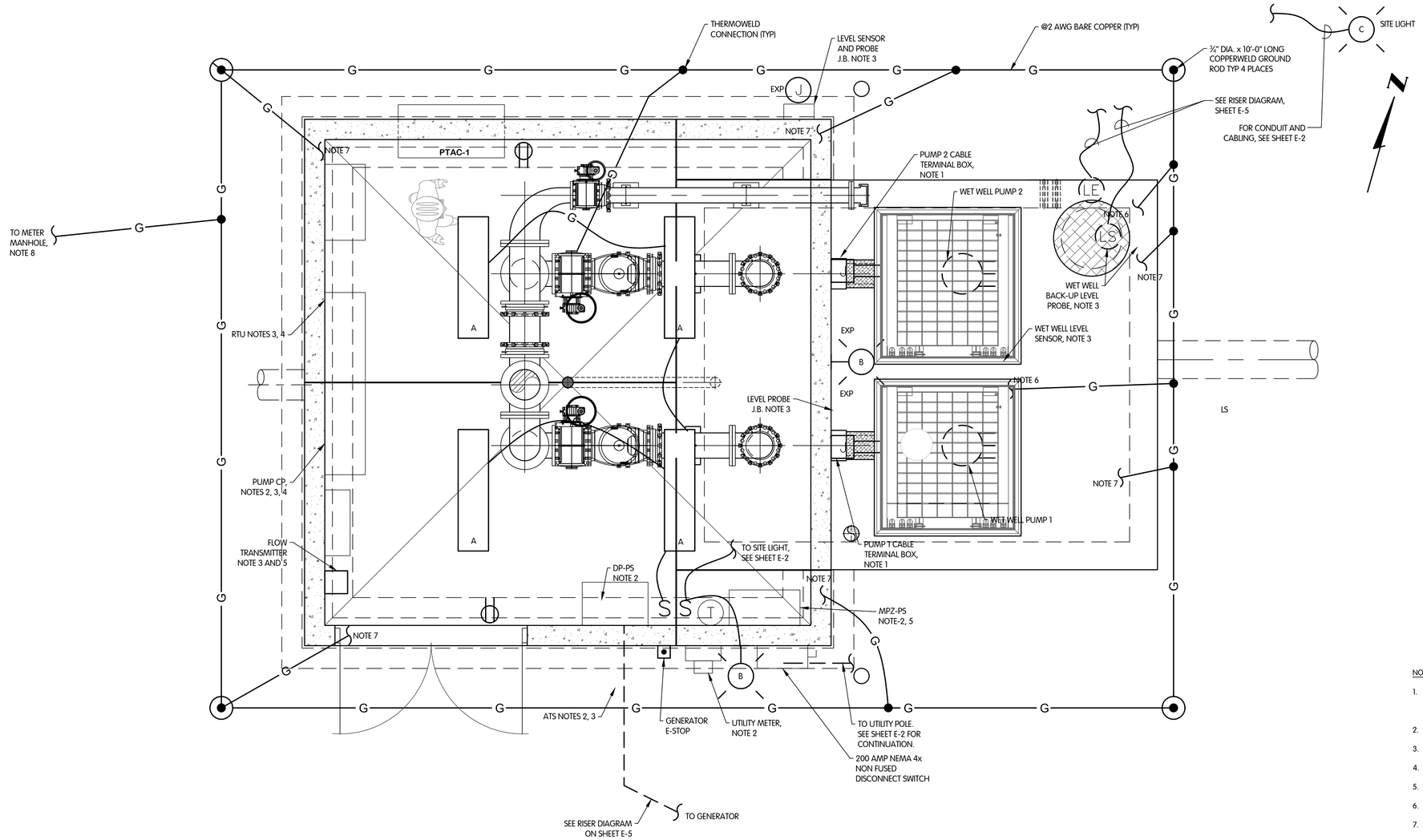

TOP PLAN

½" = 1'-0"

LIGHTING LEGEND		
TYPE	DESCRIPTION	EQUAL TO
A	48" SURFACE MOUNTED INDUSTRIAL LOW BAY LUMINAIRE WITH FROSTED POLY LENS 5000K COLOR TEMPERATURE, 33 WATT, 120 V. MOUNTED AT 10' TO CEILING	LITHONIA XVML-L48-3500 LM-MVOLT 50K-80CRI
B	WALL MOUNTED LED LUMINAIRE, 4000K COLOR TEMPERATURE, 120V, 14 WATT, WITH DARK BRONZE TEXTURED FINISH 120V MOUNTED AT 8'-0" ABOVE PAVING OR CONCRETE	LITHONIA TWRI LFD-ALD - 40K-MVOLT-PE-DDBTXD
C	LED POLE MOUNTED AREA LUMINAIRE, 4000K COLOR TEMPERATURE, TYPE 4 WIDE DISTRIBUTION, 120V, 51 WATT WITH SQUARE POLE MOUNTING AND DARK BRONZE FINISH. FIXTURE TO BE MOUNTED TO A 15 FOOT SQUARE ALUMINUM DARK BRONZE POLE MOUNTED ON A 18" DIAMETER CONCRETE SONOTUBE SEE DETAIL SHEET E-5	FIXTURE: LITHONIA RSXI LED-P1-40K-R4-MVOLT - SPA-DDBXD POLE: LITHONIA SSA-15-42-DM19-DDBXD

NOTES:

1. PUMP CABLE TERMINAL BOX SHALL BE A 12" x 12" x 6" NEMA 4x BOX WITH A LOCKING HASP. PROVIDE A CABLE ENTRY FITTING IN THE BOTTOM OF THE ENCLOSURE FOR THE CABLE FROM THE WET WELL. VERIFY PUMP CABLE DIAMETER. SEE DETAIL SHEET E-5.
2. SEE ONE LINE DIAGRAM FOR FEEDER/BREAKER SIZES ON SHEET E-3.
3. SEE RISER DIAGRAMS AND DETAIL SHEET E-5.
4. EQUIPMENT INDICATED IS FURNISHED BY OTHERS AND INSTALLED/WIRED BY CONTRACTOR.
5. SEE PANEL BOARD SCHEDULE ON SHEET E-3.
6. CONNECT TO WET WELL FLOOR DOOR FRAME.
7. CONNECT TO REBAR IN STRUCTURE.
8. CONNECT TO FLOW METER PIPE FLANGES.
9. SEE SHEET S-1 FOR GENERATOR PAD DETAIL.
10. SEE SHEET PE-4 FOR BOLLARD DETAILS.
11. THE CONTRACTOR SHALL COORDINATE THE INSTALLATION OF ELECTRICAL EQUIPMENT WITH THE PLACEMENT OF THE PRECAST CONCRETE BUILDING ROOF.
12. ALL PANELS AND EQUIPMENT TO BE MOUNTED TO THE EXTERIOR OF THE PREFABRICATED PRECAST BUILDING IN ACCORDANCE WITH THE BUILDING MANUFACTURERS RECOMMENDATIONS FOR MATERIALS METHODS AND LOCATION.

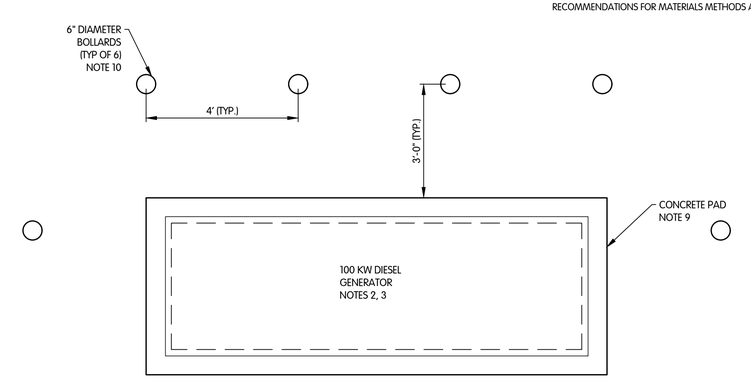

NORTHWESTERN THE DISTRICT WATER & SEWER

SANITARY SEWER PUMP STATION ELECTRICAL PLAN

NORTHWESTERN WATER AND SEWER DISTRICT, WILLOWBEND PUMP STATION IMPROVEMENTS, SS-307

NO.	DATE	REVISIONS AFTER ISSUED FOR BID	BY
5			
4			
3			
2			
1			

Jones & Henry Engineers, Ltd.

Fluid thinking©.
www.JHeng.com

JOB NO. 796-7215.002

SCALE 1/2" = 1'-0"

THIS LINE SCALES 1" WHEN PLOTTED TO NOTED SCALE

DESIGNED	DRAWN	CHECKED
PEM	BJD	TAB

STATUS: ISSUED FOR BID

DATE: AUGUST 2021

SHEET NO.

E-4

47 OF 50

TOL-7215\02ES-PLANS SECTIONS AND DETAILS
8/12/2021 2:59 PM BJDRILL
8/12/2021 2:59 PM

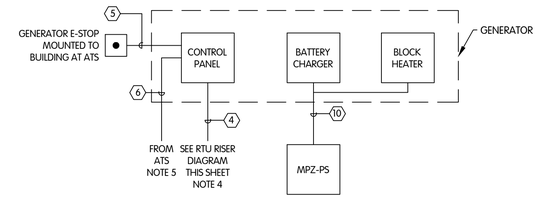

GENERATOR RISER DIAGRAM

NTS

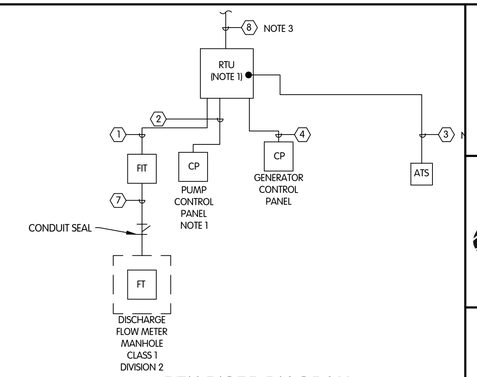

RTU RISER DIAGRAM

NTS

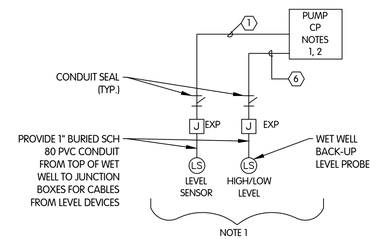

PUMP CONTROL PANEL RISER DIAGRAM

CONDUIT/WIRE SCHEDULE

1	¾"C, 2/C #16 SHLD
2	1"C, 28#14 & 1#12 GND
3	¾"C, 8#14 & 1#12 GND
4	1"C, 8#14 & 1#12 GND
5	¾"C, 2#14 & 1#12 GND
6	(NOT USED)
7	1"C, VENDOR CABLE
8	1"C, ANTENNA CABLE (BY OTHERS)
9	¾"C, 3#8 & 1#10 GND
10	1"C, 4#10 & 2#10 GND

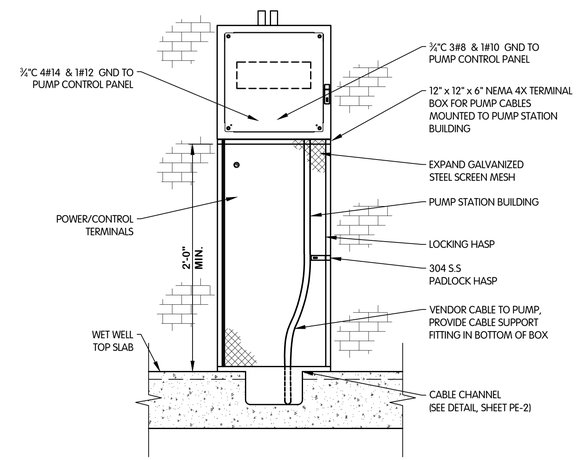

PUMP CABLE TERMINAL BOX DETAIL

1½" = 1'-0"

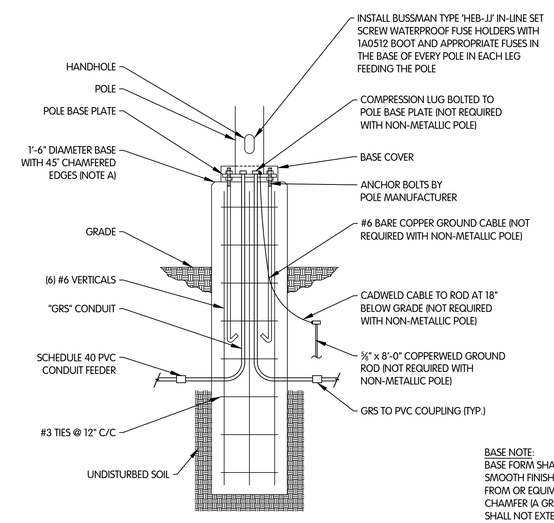

POLE BASE DETAIL

NTS

BASE NOTE:
BASE FORM SHALL HAVE AN INTERNAL COATING TO PROVIDE A SMOOTH FINISH UPON REMOVAL (SONOTUBE FINISH FREE FIBER FROM OR EQUIVALENT). BASE FORM SHALL SHAPE CONCRETE CHAMFER (A GROUND CHAMFER IS NOT ACCEPTABLE) AND FORM SHALL NOT EXTEND MORE THEN 18" BELOW GRADE. USE 4000# CONCRETE WITH 6% AIR ENTRAINMENT - VIBRATED IN PLACE. VIBRATE USING A VIBRATING NEEDLE; DO NOT VIBRATE THE FORM FROM THE OUTSIDE; DO NOT TOUCH THE INSIDE SURFACE OF THE FORM. REMOVE ENTIRE FORM AFTER CONCRETE HAS CURED.

NOTES:

1. EQUIPMENT INDICATED IS FURNISHED BY PUMP MANUFACTURER THROUGH THIS CONTRACT TO BE INSTALLED AND WIRED BY THE CONTRACTOR
2. SEE SINGLE LINE DIAGRAM SHEET E-3 FOR CONDUIT AND WIRED WET WELL PUMPS.
3. CONDUIT TO EXISTING WOOD POLE. MOUNT ANTENNA FURNISHED BY OTHERS TO POLE AND INSTALL ANTENNA CABLE ALSO BY OTHERS TO POLE.
4. LOW FUEL, GENERATOR COMMON FAULT AND GENERATOR RUNNING ALARMS.
5. GENERATOR START SIGNAL.
6. ATS NORMAL POSITION ATS STANDBY POSITION, ATS COMMON FAULT, LOSS OF UTILITY POWER.

NORTHWESTERN THE DISTRICT WATER & SEWER

ELECTRICAL DETAILS

NORTHWESTERN WATER AND SEWER DISTRICT, WILLOWBEND PUMP STATION IMPROVEMENTS, SS-307

NO.	DATE	REVISIONS AFTER ISSUED FOR BID	BY
5			
4			
3			
2			
1			

Jones & Henry Engineers, Ltd.

Fluid thinking©.
www.JHeng.com

JOB NO. 796-7215.002

SCALE AS NOTED

THIS LINE SCALES 1" WHEN PLOTTED TO NOTED SCALE

DESIGNED	DRAWN	CHECKED
PEM	BJD	TAB

STATUS: ISSUED FOR BID

DATE: AUGUST 2021

SHEET NO.

E-5

48 OF 50

TOL-7215002E4-ELECTRICAL DETAILS
2/2/2021 2:59 PM BJDRILL
8/12/2021 2:59 PM

EROSION AND SEDIMENTATION CONTROL

1. EROSION AND SEDIMENTATION CONTROL PRACTICES SHALL BE INSTALLED TO NATURAL RESOURCES CONSERVATION SERVICE OR EQUIVALENT STANDARDS AND SPECIFICATIONS FOR PARTICULAR TECHNIQUES. THE PRACTICES ARE TO BE MAINTAINED IN EFFECTIVE WORKING CONDITION DURING CONSTRUCTION AND UNTIL ALL DISTURBED AREAS HAVE BEEN PERMANENTLY STABILIZED.
2. CLEARING AND GRUBBING SHALL NOT COMMENCE UNTIL THE CONTRACTOR IS PREPARED TO START CONSTRUCTION.
3. SEDIMENT BASINS AND DIVERSION DIKES SHALL BE CONSTRUCTED BEFORE DISTURBING THE LAND THAT DRAINS INTO THEM.
4. DIVERSION CHANNELS SHALL BE CONSTRUCTED AROUND THE CONSTRUCTION SITE TO COLLECT RUNOFF AND PREVENT SILT AND OTHER ERODED MATERIALS FROM ENTERING LOCAL DRAINAGE COURSES. DIVERSION CHANNELS SHALL BE STABILIZED BY SEEDING OR RIP-RAP OR LINED WITH PLASTIC, AND FLOW TO TEMPORARY SILT BASINS.
5. EXISTING TOPSOIL THAT IS TO BE REUSED SHALL BE STOCKPILED AND REPLACED UPON FINAL GRADING. STOCKPILED TOPSOIL SHALL BE PROTECTED WITH SILT BARRIERS AND TEMPORARY SEEDING OR A COVERING SUCH AS ANCHORED STRAW MULCH.
6. EXCESS SOIL THAT IS STOCKPILED SHALL BE EITHER REMOVED OR PERMANENTLY STABILIZED WITHIN 15 DAYS OF THE COMPLETION OF CONSTRUCTION.
7. EXCAVATED MATERIALS SHALL BE STOCKPILED ON THE UPHILL SIDE OF TRENCHES.
8. ONLY THOSE TREES, SHRUBS, AND GRASSES THAT MUST BE REMOVED FOR CONSTRUCTION MAY BE REMOVED; PROTECT THE REST TO PRESERVE THEIR AESTHETIC, HABITAT, AND EROSION CONTROL VALUES.
9. DISTURBED LAND EXPOSED LONGER THAN 15 DAYS SHALL BE TEMPORARILY STABILIZED BY SEEDING AND MULCHING OR MULCHING ALONE.
10. AS CONSTRUCTION IS COMPLETED, PERMANENTLY STABILIZE EACH DISTURBED AREA WITH PERENNIAL VEGETATION. IF FINAL GRADING AND SEEDING WILL NOT OCCUR WITHIN 30 DAYS, ALL DISTURBED AREAS SHALL BE TEMPORARILY SEEDED AND/OR MULCHED IMMEDIATELY.
11. FINAL GRADING SHALL BE CONSISTENT WITH PRE-CONSTRUCTION TOPOGRAPHY TO MAINTAIN DRAINAGE AND AESTHETICS.
12. NO MORE THAN 200 FEET OF TRENCH SHALL BE OPEN AT ANY TIME. MINIMIZE THE AREA DISTURBED FOR TRENCH OPENING, LAYING OF PIPE, AND BACKFILLING.
13. TRENCHES SHALL BE BACKFILLED IMMEDIATELY; COMPACT AND SEED AND/OR MULCH TRENCHES IN UNPAVED AREAS WITHIN 15 DAYS AFTER THEY HAVE BEEN OPENED.
14. LARGE-SCALE CONSTRUCTION SHALL BE RESEEDED IN STAGES TO PREVENT EROSION WHEN SEASONAL CONDITIONS PERMIT. WITHIN 15 DAYS AFTER A SPAN HAS BEEN COMPLETED, THE CONTRACTOR SHALL PLACE ALL TOPSOIL, FINE GRADE, SEED, FERTILIZE, AND MULCH ALL AREAS DISTURBED BY ACTIVITIES ASSOCIATED WITH THE CONSTRUCTION OF THAT SECTION OF PIPE.
15. SLOPES EXCEEDING 15 PERCENT OR TENDING TO BE UNSTABLE SHALL BE STABILIZED WITH WATER DIVERSION BERMS, SODDING, OR THE USE OF JUTE OR EXCELSIOR BLANKETS.
16. WHEN BORROW MATERIAL IS OBTAINED FROM OTHER THAN COMMERCIAL SOURCES, CONTROL EROSION OF THE BORROW SITE DURING AND AFTER THE WORK TO PREVENT SEDIMENT FROM ENTERING STREAMS OR OTHER WATER BODIES. WASTE OR DISPOSAL AREAS AND CONSTRUCTION ROADS SHALL BE LOCATED AND CONSTRUCTED IN A MANNER THAT SHALL KEEP SEDIMENT FROM ENTERING STREAMS.
17. UNPAVED AREAS SHALL BE WET DOWN AS NECESSARY USING WATER OR OTHER ENVIRONMENTALLY BENIGN SUBSTANCE DURING CONSTRUCTION TO MINIMIZE DUST.
18. IF WORK IS SUSPENDED FOR ANY REASON, THE CONTRACTOR SHALL MAINTAIN THE SOIL EROSION AND SEDIMENTATION CONTROLS IN GOOD OPERATING CONDITION DURING THE SUSPENSION OF THE WORK. ALSO, WHEN SEASONAL CONDITIONS PERMIT AND THE SUSPENSION OF WORK IS EXPECTED TO EXCEED A PERIOD OF ONE MONTH, THE CONTRACTOR SHALL PLACE TOPSOIL, FINE GRADE, SEED, FERTILIZE, AND MULCH ALL DISTURBED AREAS LEFT EXPOSED WHEN WORK IS STOPPED.
19. WHEN WORKING ADJACENT TO A WATERWAY, THE CONTRACTOR SHALL MAINTAIN A BUFFER ZONE OF UNDISTURBED VEGETATION BETWEEN THE WORK AREA AND THE WATERWAY. IF A BUFFER ZONE OF VEGETATION CANNOT PREVENT SILTATION OF THE WATERWAY, SILT BARRIERS SHALL ALSO BE INSTALLED BY THE CONTRACTOR IN THESE AREAS TO PREVENT SEDIMENT-LADEN RUNOFF FROM ENTERING THE WATERWAY.
20. MATERIAL EXCAVATED FROM BORING PITS (FOR JACK AND BORE LOCATIONS) SHALL BE SURROUNDED WITH SILT BARRIERS AT SUFFICIENT DISTANCE TO ENSURE THEIR INTEGRITY AND EFFECTIVENESS.
21. CONTRACTOR SHALL REMOVE DAILY ALL MUD, SOIL, AND DEBRIS THAT MAY BE TRACKED ONTO EXISTING STREETS, DRIVES, OR WALKS BY HIS EQUIPMENT OR THAT OF SUBCONTRACTORS OR SUPPLIERS.
22. ALL MATERIALS TO BE DISPOSED OF OFF-SITE MUST BE DISPOSED OF IN AN ENVIRONMENTALLY SOUND MANNER IN ACCORDANCE WITH LOCAL, STATE, AND FEDERAL REGULATIONS. NO EXCESS MATERIALS ARE TO BE DISPOSED OF IN ANY WETLAND, FLOOD PLAIN, OR OTHER ENVIRONMENTALLY SENSITIVE AREAS. EROSION CONTROL MEASURES AT THE DISPOSAL SITE MUST BE INSTALLED AND MAINTAINED UNTIL DISPOSAL IS COMPLETE AND THE DISPOSAL SITE IS PERMANENTLY STABILIZED.

FLOODPLAINS / WETLANDS

1. WHEN PIPELINE CONSTRUCTION TAKES PLACE IN FLOODPLAINS AND WETLANDS, THE CONTRACTOR SHALL PLACE BULKHEADS OF CLAY SOIL ACROSS THE TRENCH AT 100 FOOT INTERVALS TO RESIST THE MOVEMENT OF GROUNDWATER THROUGH GRANULAR MATERIAL. SUCH BULKHEADS SHALL BE CAREFULLY COMPACTED AND SHALL EXTEND APPROXIMATELY 3 FEET IN A DIRECTION PARALLEL TO THE PIPE AND SHALL EXTEND FROM THE BOTTOM OF THE TRENCH TO A HEIGHT OF 6 INCHES ABOVE THE GROUNDWATER TABLE OR THE TOP OF THE GRANULAR FILL MATERIAL, WHICHEVER IS HIGHER.

TRAFFIC CONTROL

1. AT LEAST ONE LANE OF TRAFFIC SHALL BE MAINTAINED ALONG THE TRAVEL ROUTE TO THE CONSTRUCTION SITE.
2. ACCESS SHALL BE MAINTAINED FOR EMERGENCY VEHICLES AT ALL TIMES.
3. NO TRENCH SHALL BE LEFT OPEN AT THE END OF THE WORK DAY.
4. ANY CONSTRUCTION EQUIPMENT OR EXCAVATIONS NEAR ROADS SHALL BE MARKED WITH LIGHTS OR REFLECTORS.
5. THE CONTRACTOR SHALL PROVIDE, ERECT, AND MAINTAIN ALL NECESSARY BARRICADES, WARNING SIGNS, DANGER SIGNALS, FLAGGERS, WATCHERS, AND ALL OTHER APPROPRIATE PRECAUTIONS NECESSARY TO THE PROTECTION OF THE WORK AND FOR SAFETY.
6. PRIOR TO CLOSING OFF CLEAR ACCESS TO ANY PUBLIC ALLEY, STREET, ROAD, AVENUE, OR BOULEVARD, THE CONTRACTOR SHALL HAVE CONSENT FROM LOCAL OFFICIALS AND THE ENGINEER.

AIR POLLUTION / NOISE CONTROL

1. CONSTRUCTION SHALL BE LIMITED TO DAYTIME HOURS.
2. CONSTRUCTION EQUIPMENT SHALL BE PROVIDED WITH INTAKE SILENCERS AND MUFFLERS, AS REQUIRED BY SAFETY STANDARDS.
3. ALL CONSTRUCTION VEHICLES SHALL BE EQUIPPED WITH PROPER EMISSIONS CONTROL EQUIPMENT.
4. ALL EQUIPMENT AND MACHINERY SHALL BE MAINTAINED TO MINIMIZE EXHAUST EMISSIONS AND NOISE.

TREES / VEGETATION PROTECTION

1. TREE REMOVAL SHALL BE LIMITED TO THAT NECESSARY FOR CONSTRUCTION AND SHALL BE LIMITED TO THE PERMANENT EASEMENT UNLESS EXPLICITLY PERMITTED BY THE ENGINEER.
2. NO TREE REMOVAL SHALL BE PERMITTED OUTSIDE THE TEMPORARY EASEMENT WITHOUT PERMISSION OF THE ENGINEER.
3. TREES WHICH ARE NOT TO BE REMOVED SHALL BE PROTECTED FROM INJURY BY TREES BEING FELLED.
4. PRIOR TO CLEARING, THE CONTRACTOR AND ENGINEER SHALL WALK THE ACQUIRED EASEMENTS AND DESIGNATE THE TREES THAT ARE TO BE SAVED. TREES TO BE SAVED SHALL BE CLEARLY MARKED BY PAINT WITH THE LETTER "S". TREES TO BE PROTECTED BY AN APPROPRIATE BARRIER SHALL BE MARKED WITH A "S" ENCLOSED ON A CIRCLE.
5. SOIL AND OTHER MATERIAL SHALL NOT BE STORED NEXT TO OR WITHIN THE DRIP-LINE OF TREES.
6. PRESERVATION OF LANDSCAPING SHOULD TAKE PRECEDENCE OVER REMOVAL. IF REMOVAL OR DAMAGE IS UNAVOIDABLE, EXISTING VEGETATION SHALL BE REPAIRED OR REPLACED "IN-KIND" UNLESS THE LAND OWNER SPECIFIES OTHERWISE.
7. IF TREES/SHRUBS CANNOT BE REPLACED IN THE SAME LOCATION DUE TO INSTALLATION OF THE WATER OR SEWER LINES, RELOCATION OF THE TREES/SHRUBS SHALL BE CONSIDERED.
8. THE CONTRACTOR SHALL REPAIR ALL INJURIES TO BARK, TRUNKS, LIMBS, AND ROOTS OF REMAINING VEGETATION BY PROPERLY DRESSING, CUTTING, AND BRACING, USING ONLY APPROVED TREE SURGERY METHODS, TOOLS, AND MATERIALS. WHEN ROOTS ARE DAMAGED DURING EXCAVATION, THE ABOVE-GROUND PORTION OF THE TREE SHALL BE PRUNED TO COMPENSATE.
9. SELECTIVE PRUNING OF TREE LIMBS PRIOR TO CONSTRUCTION SHALL ONLY BE DONE WITHIN ESTABLISHED EASEMENTS WHERE REMOVAL IS NECESSARY FOR OPERATION OF EQUIPMENT.
10. LIMIT THE USE OF RIP-RAP TO AREAS WHERE STREAM FLOW CONDITIONS PRECLUDE VEGETATIVE STABILIZATION.

DEWATERING

1. ALL DEWATERING FLOWS SHALL BE SETTLED IN SILTATION BASINS OR DIRECTED THROUGH FILTERING DEVICES BEFORE DISCHARGE TO STABILIZED SITES, SUCH AS STREAMS OR STORM SEWERS, NOT ONTO EXPOSED SOILS, STREAM BANKS, OR ANY OTHER SITE WHERE THE FLOW COULD CAUSE EROSION.
2. SILT FROM CONSTRUCTION SITES SHALL NOT BE PERMITTED TO ENTER STORM SEWERS. WHEN CONSTRUCTION OCCURS NEAR STORM SEWER INLETS, EROSION CONTROL MEASURES SUCH AS INLET FILTERS SHALL BE USED TO PREVENT SILT FROM ENTERING THE STORM SEWERS.
3. ALL WATER SHALL BE CONVEYED FROM THE CONSTRUCTION SITE IN A CLOSED CONDUIT. DO NOT USE TRENCH EXCAVATIONS AS TEMPORARY DRAINAGE DITCHES.

STREAM CROSSINGS

1. WHEN CLEARING VEGETATION PRIOR TO INITIATING STREAM CROSSING WORK, STREAMBANK TREES, SHRUBS, AND OTHER VEGETATION SHOULD BE LEFT IN PLACE TO HELP CONTROL EROSION; WHERE EQUIPMENT OPERATION REQUIRES TREE REMOVAL, STUMPS AND ROOTS ARE TO REMAIN IN PLACE TO HELP ANCHOR THE STREAMBANK.
2. PRIOR TO STARTING ANY STREAM CROSSING, SILT BARRIERS SHALL BE PLACED ALONG THE BANKS WHERE VEGETATION REMOVAL HAS OCCURRED OR IS ANTICIPATED, OR EXPOSED SOIL EXISTS. SPOILS OR OTHER FILL MATERIALS ARE NOT TO BE STOCKPILED WITHIN 50 FEET OF THE STREAM.
3. CONSTRUCTION WITHIN A STREAM SHALL BE CONTINUED UNTIL COMPLETED. A STREAM CROSSING SHALL NOT BE STARTED UNLESS THE CONTRACTOR IS PREPARED TO FINISH THE WORK IMMEDIATELY. WORK SHALL NOT START UNLESS TIME AND WEATHER CONSTRAINTS HAVE BEEN PROVIDED FOR. STREAM CROSSING WORK SHALL BE RESTRICTED TO PERIODS OF DRY WEATHER AND LOW-FLOW OR NO-FLOW CONDITIONS.
4. RESTORATION SHALL INCLUDE THE RE-ESTABLISHMENT OF CHANNEL CONTOURS AND BANK STABILIZATION AND SHALL START IMMEDIATELY AFTER THE CROSSING IS COMPLETED.
5. WHEN USING OPEN CUT METHODS FOR LAYING SEWER PIPE ACROSS INTERMITTENT OR VERY SMALL STREAMS, THE STREAM CROSSING AND ASSOCIATED RESTORATION SHALL BE PERFORMED WITHIN A 48 HOUR PERIOD. THE STREAM CROSSING AND ASSOCIATED RESTORATION SHALL BE PERFORMED WITHIN A ONE WEEK (SEVEN DAYS) PERIOD IF THE CROSSING INVOLVES TEMPORARY DIVERSION OF A SMALL TO MODERATE SIZE STREAM AND ENCASEMENT OF THE PIPE IN CONCRETE.
6. ACCEPTABLE FLOW DIVERSION PROCEDURES SUCH AS BYPASS PUMPING, TEMPORARY PARALLEL STREAM CHANNELS, COFFERDAMS, OR TEMPORARY DIKES SHALL BE USED. THE DIVERSION PROCEDURE SHALL BE CONDUCTED IN SUCH A FASHION TO PREVENT THE DISCHARGE OF ANY AND ALL SPOILS, SILTS, CONSTRUCTION DEBRIS, OR EXCAVATED MATERIALS INTO THE STREAM WATER. THE COMPLETE CROSSING SHALL NOT IMPEDE THE FLOW OF WATER OR CREATE AN IMPOUNDMENT OF WATER UPSTREAM OF THE CROSSING.
7. THE WIDTH OF THE EASEMENT FOR THE STREAM CROSSING SHALL BE RESTRICTED TO ONLY THAT NECESSARY TO PERFORM THE WORK.
8. MATERIAL EXCAVATED FROM BORING PITS (FOR JACK AND BORE CROSSINGS) SHALL BE SURROUNDED WITH PROPERLY INSTALLED AND MAINTAINED SILT FENCES.
9. CONSTRUCTION EQUIPMENT SHALL BE KEPT OUT OF THE STREAM CHANNEL EXCEPT DURING ACTUAL PIPE INSTALLATION.

ARCHAEOLOGICAL / HISTORICAL RESOURCES

1. CONTRACTORS AND SUBCONTRACTORS ARE REQUIRED UNDER OHIO REVISED CODE SECTION 149.53 TO NOTIFY THE OHIO HISTORICAL SOCIETY AND THE OHIO HISTORIC SITE PRESERVATION BOARD OF ARCHAEOLOGICAL DISCOVERIES IN THE PROJECT AREA, AND TO COOPERATE WITH THOSE ENTITIES IN ARCHAEOLOGICAL AND HISTORIC SURVEYS AND SALVAGE EFFORTS.

CONTACT: OHIO HISTORIC PRESERVATION OFFICE
PHONE: 614-297-2470

PROHIBITED CONSTRUCTION ACTIVITIES

1. DISPOSING OF EXCESS OR UNSUITABLE EXCAVATED MATERIAL OR TREES, BRUSH, AND OTHER DEBRIS IN ANY STREAM CORRIDOR, ANY WETLANDS, ANY SURFACE WATERS, OR AT UNSPECIFIED LOCATIONS.
2. STOCKPILING MATERIALS OR STORING CONSTRUCTION EQUIPMENT AND VEHICLES ON PROPERTY NOT SPECIFIED ON THE PLANS BY THE ENGINEER FOR SUCH PURPOSES.
3. INDISCRIMINATE, ARBITRARY, OR CAPRICIOUS OPERATION OF EQUIPMENT IN ANY STREAM CORRIDORS, ANY WETLANDS, ANY SURFACE WATERS, OR OUTSIDE THE EASEMENT LIMITS.
4. PUMPING OF SEDIMENT-LADEN WATER FROM TRENCHES OR OTHER EXCAVATIONS DIRECTLY INTO ANY SURFACE WATERS, ANY STREAM CORRIDORS, ANY WETLANDS, OR STORM SEWERS; ALL SUCH WATER SHALL BE PROPERLY FILTERED OR SETTLED TO REMOVE SILT PRIOR TO RELEASE.
5. DISCHARGING POLLUTANTS SUCH AS CHEMICALS, FUELS, LUBRICANTS, BITUMINOUS MATERIALS, RAW SEWAGE, OR OTHER HARMFUL WASTE INTO OR ALONGSIDE OF RIVERS, STREAMS, IMPOUNDMENTS, OR INTO ANY NATURAL OR MAN-MADE CHANNELS.
6. PERMANENT OR UNSPECIFIED ALTERATION OF THE FLOW LINE OF ANY STREAM.
7. DAMAGING VEGETATION OUTSIDE OF THE CONSTRUCTION AREA.
8. OPEN BURNING OF PROJECT DEBRIS WITHOUT A PERMIT.
9. DISCHARGING INJURIOUS SILICA DUST CONCENTRATIONS INTO THE ATMOSPHERE RESULTING FROM BREAKING, CUTTING, CHIPPING, DRILLING, BUFFING, GRINDING, POLISHING, SHAPING OR SURFACING CLOSER THAN 200 FEET TO PLACES OF RESIDENCES OR COMMERCIAL, PROFESSIONAL, QUASI-PUBLIC, OR PUBLIC PLACES OF HUMAN OCCUPATION.
10. RUNNING WELL POINT OR PUMP DISCHARGE LINES THROUGH PRIVATE PROPERTY OR PUBLIC PROPERTY AND RIGHTS-OF-WAY WITHOUT THE WRITTEN PERMISSION OF THE PROPERTY OWNER AND THE CONSENT OF THE ENGINEER.
11. OPERATIONS ENTAILING THE USE OF VIBRATORY HAMMERS OR COMPACTORS OUTSIDE THE HOURS OF 8:00 A.M. AND 5:00 P.M. OR OUTSIDE THE HOURS ALLOWED FOR CONSTRUCTION BY LOCAL ORDINANCES OR REGULATIONS.
12. CLOSING OFF CLEAR ACCESS TO ANY PUBLIC ALLEY, STREET, ROAD, AVENUE, OR BOULEVARD WITHOUT THE PRIOR CONSENT OF MUNICIPAL OFFICIALS AND THE ENGINEER, AND CLOSING CLEAR ACCESS:
   - BY FIRE PROTECTION EQUIPMENT AND EMERGENCY VEHICLES;
   - BY THE PUBLIC TO ANY COMMERCIAL OR PROFESSIONAL PLACE OF BUSINESS, QUASI-PUBLIC OR PUBLIC ESTABLISHMENT, OR RESIDENCE; OR
   - BY VEHICLES TO DRIVEWAYS WITHOUT PROVIDING ALTERNATE ACCESS.

Ohio Utilities Protection Service
Call 811 before you dig

NORTHWESTERN THE DISTRICT WATER & SEWER

EROSION CONTROL DETAILS

NORTHWESTERN WATER AND SEWER DISTRICT,
WILLOWBEND PUMP STATION IMPROVEMENTS, SS-307

NO.	DATE	REVISIONS AFTER ISSUED FOR BID	BY
5			
4			
3			
2			
1			

Jones & Henry Engineers, Ltd.
Fluid thinking©.
www.JHeng.com

JOB NO. 796-7215.002
SCALE NONE
THIS LINE SCALES 1" WHEN PLOTTED TO NOTED SCALE

DESIGNED	DRAWN	CHECKED
TAB	BJD	TAB

STATUS: ISSUED FOR BID
DATE: AUGUST 2021
SHEET NO.
EC-1

TOL-7215\02\EC01-EROSION CONTROL DETAILS1
2017/2018 ACWA - BDRILL
8/12/2021 4:00 PM

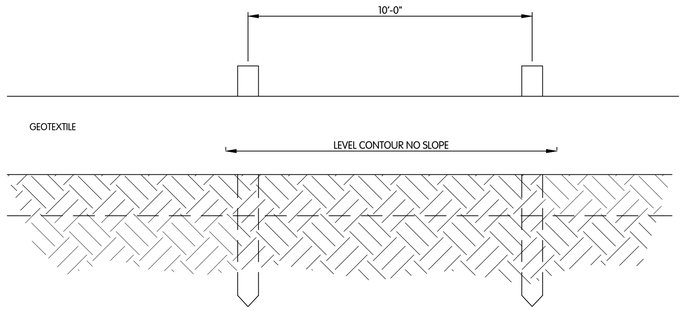

ELEVATION

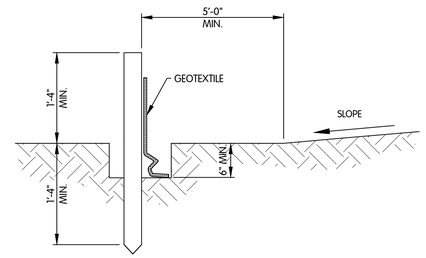

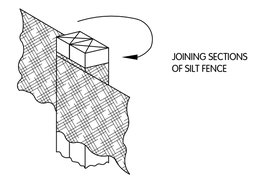

NOTES:

1. SILT FENCE SHALL BE CONSTRUCTED BEFORE UPSLOPE LAND DISTURBANCE BEGINS.
2. ALL SILT FENCE SHALL BE PLACED AS CLOSE TO THE CONTOUR AS POSSIBLE SO THAT WATER WILL NOT CONCENTRATE AT LOW POINTS IN THE FENCE AND SO THAT SMALL SWALES OR DEPRESSIONS WHICH MAY CARRY SMALL CONCENTRATED FLOWS TO THE SILT FENCE ARE DISSIPATED ALONG ITS LENGTH.
3. TO PREVENT WATER PONDED BY THE SILT FENCE FROM FLOWING AROUND THE ENDS, EACH END SHALL BE CONSTRUCTED UPSLOPE SO THAT THE ENDS ARE AT A HIGHER ELEVATION.
4. WHERE POSSIBLE, SILT FENCE SHALL BE PLACED ON THE FLATTEST AREA AVAILABLE.
5. WHERE POSSIBLE, VEGETATION SHALL BE PRESERVED FOR 5 FT. (OR AS MUCH AS POSSIBLE) UPSLOPE FROM THE SILT FENCE. IF VEGETATION IS REMOVED, IT SHALL BE REESTABLISHED WITHIN 7 DAYS FROM THE INSTALLATION OF THE FENCE.
6. SOIL STOCKPILES OR OTHER SOURCES OF SEDIMENT SHALL HAVE SILT FENCE PROTECTION.
7. THE SILT FENCE SHALL BE PLACED IN A TRENCH CUT A MINIMUM OF 6" DEEP. THE TRENCH SHALL BE CUT WITH A TRENCHER, CABLE LAYING MACHINE, OR OTHER SUITABLE DEVICE WHICH WILL ENSURE AN ADEQUATELY UNIFORM TRENCH DEPTH.
8. THE SILT FENCE SHALL BE PLACED WITH THE STAKES ON THE DOWN SLOPE SIDE OF THE GEOTEXTILE AND SO THAT 8" OF CLOTH ARE BELOW THE GROUND SURFACE. EXCESS MATERIAL SHALL LAY ON THE BOTTOM OF THE 6" DEEP TRENCH. THE TRENCH SHALL BE BACK FILLED AND COMPACTED.
9. SEAMS BETWEEN SECTIONS OF SILT FENCE SHALL BE OVERLAPPED WITH THE END STAKES OF EACH SECTION WRAPPED TOGETHER BEFORE DRIVING INTO THE GROUND.
10. MAINTENANCE-- SILT FENCE SHALL ALLOW RUNOFF TO PASS ONLY AS DIFFUSE FLOW THROUGH THE GEOTEXTILE. IF RUNOFF OVER TOPS THE SILT FENCE, FLOWS UNDER OR AROUND THE ENDS, OR IN ANY OTHER WAY BECOMES A CONCENTRATED FLOW, ONE OF THE FOLLOWING SHALL BE PERFORMED, AS APPROPRIATE:
    - A. THE LAYOUT OF THE SILT FENCE SHALL BE CHANGED.
    - B. ACCUMULATED SEDIMENT SHALL BE REMOVED.
    - C. OTHER PRACTICES SHALL BE INSTALLED.

CRITERIA FOR SILT FENCE MATERIALS:

1. FENCE POSTS - THE LENGTH SHALL BE A MINIMUM OF 32" LONG. WOOD POST WILL BE 2" X 2" HARDWOOD OF SOUND QUALITY. THE MAXIMUM SPACING BETWEEN POSTS SHALL BE 10 FT.
2. SILT FENCE FABRIC (SEE CHART BELOW):

FABRIC PROPERTIES	VALUES	TEST METHOD
GRAB TENSILE STRENGTH	90 LB. MINIMUM	ASTM D 1682
MULLEN BURST STRENGTH	190 P.S.I. MINIMUM	ASTM D 3786
SLURRY FLOW RATE	0.3 GAL./MIN./FT.^{2} MAX.	
EQUIVALENT OPENING SIZE	40-80	US STD. SIEVE CW-02215
ULTRAVIOLET RADIATION STABILITY	90% MINIMUM	ASTM-G-26

SILT FENCE

NTS

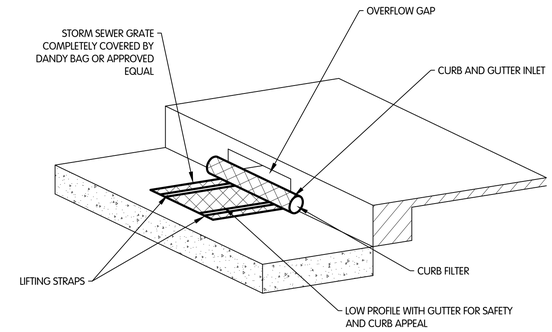

INLET PROTECTION FOR DRAINS WITH HOOD

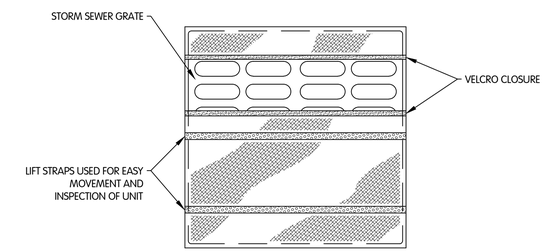

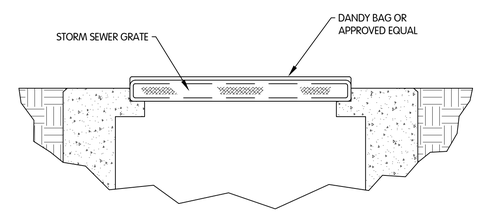

INLET PROTECTION FOR DRAINS WITHOUT HOOD

NOTES:

1. INLET PROTECTION SHALL BE CONSTRUCTED EITHER BEFORE UPSLOPE LAND DISTURBANCE BEGINS OR BEFORE THE STORM SEWER BECOMES ACTIVE IN THE CASE OF NEW CONSTRUCTION.

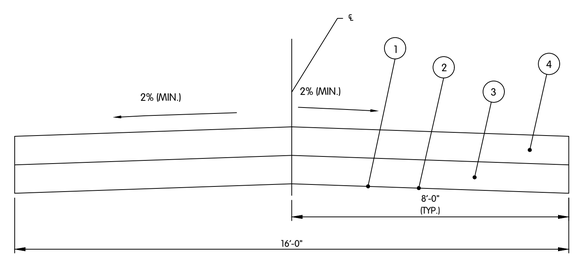

1. ITEM 204 SUBGRADE COMPACTION
2. ITEM 861 GEOGRID FOR SUBGRADE, TENSAR TRIAX OR APPROVED EQUAL
3. 12" ODOT NO. 2 STONE (ITEM 703)
4. 6" ITEM 304 AGGREGATE BASE

NOTES:

1. THE TYPICAL SECTION PROVIDED FOR TEMPORARY ACCESS ROAD SHALL BE CONSIDERED THE MINIMUM CROSS SECTION TO BE PROVIDED. THE CONTRACTOR MAY CHOSE TO THICKEN THE AGGREGATE OR STONE LAYERS TO ACCOMMODATE EQUIPMENT TO BE USED FOR WORK. NO ADDITIONAL COMPENSATION SHALL BE PROVIDED FOR ADDITIONAL AGGREGATE OR STONE THICKNESS.
2. THE CONTRACTOR SHALL PROVIDE ADDITIONAL AGGREGATE STONE TO ADDRESS AREAS OF DEFICIENCY AS DIRECTED BY THE ENGINEER. NO ADDITIONAL COMPENSATION SHALL BE PROVIDED FOR ADDITIONAL AREAS OF DEFICIENCY.
3. ADDITIONAL CONSTRUCTION ENTRANCES SHALL BE PROVIDED AT ALL LOCATIONS WHERE THE CONTRACTOR'S ACCESS ROUTES OR EQUIPMENT MAY TRACK SPOILS ON TO PUBLIC ROADWAYS.

CONSTRUCTION ENTRANCE TYPICAL SECTION

NTS

NORTHWESTERN THE DISTRICT WATER & SEWER

EROSION CONTROL DETAILS

NORTHWESTERN WATER AND SEWER DISTRICT,
WILLOWBEND PUMP STATION IMPROVEMENTS, SS-307

NO.	DATE	REVISIONS AFTER ISSUED FOR BID	BY
5			
4			
3			
2			
1			

Jones & Henry Engineers, Ltd.

Fluid thinking©.
www.JHeng.com

JOB NO. 796-7215.002

SCALE NONE

THIS LINE SCALES 1" WHEN PLOTTED TO NOTED SCALE

DESIGNED	DRAWN	CHECKED
TAB	BJD	TAB

STATUS: ISSUED FOR BID

DATE AUGUST 2021

SHEET NO.

EC-2

50 OF 50

Ohio Utilities Protection Service
Call 811 before you dig

TOL-7215\002\EC02-EROSION CONTROL DETAILS
8/27/2021 7:54 AM - BDRILL
8/12/2021 3:00 PM -