# PAULDING E.V. SCHOOLS

## SOFTBALL FIELD OBSERVATION PLATFORM
## 755 NORTH WATER STREET
## PAULDING, OHIO 45879

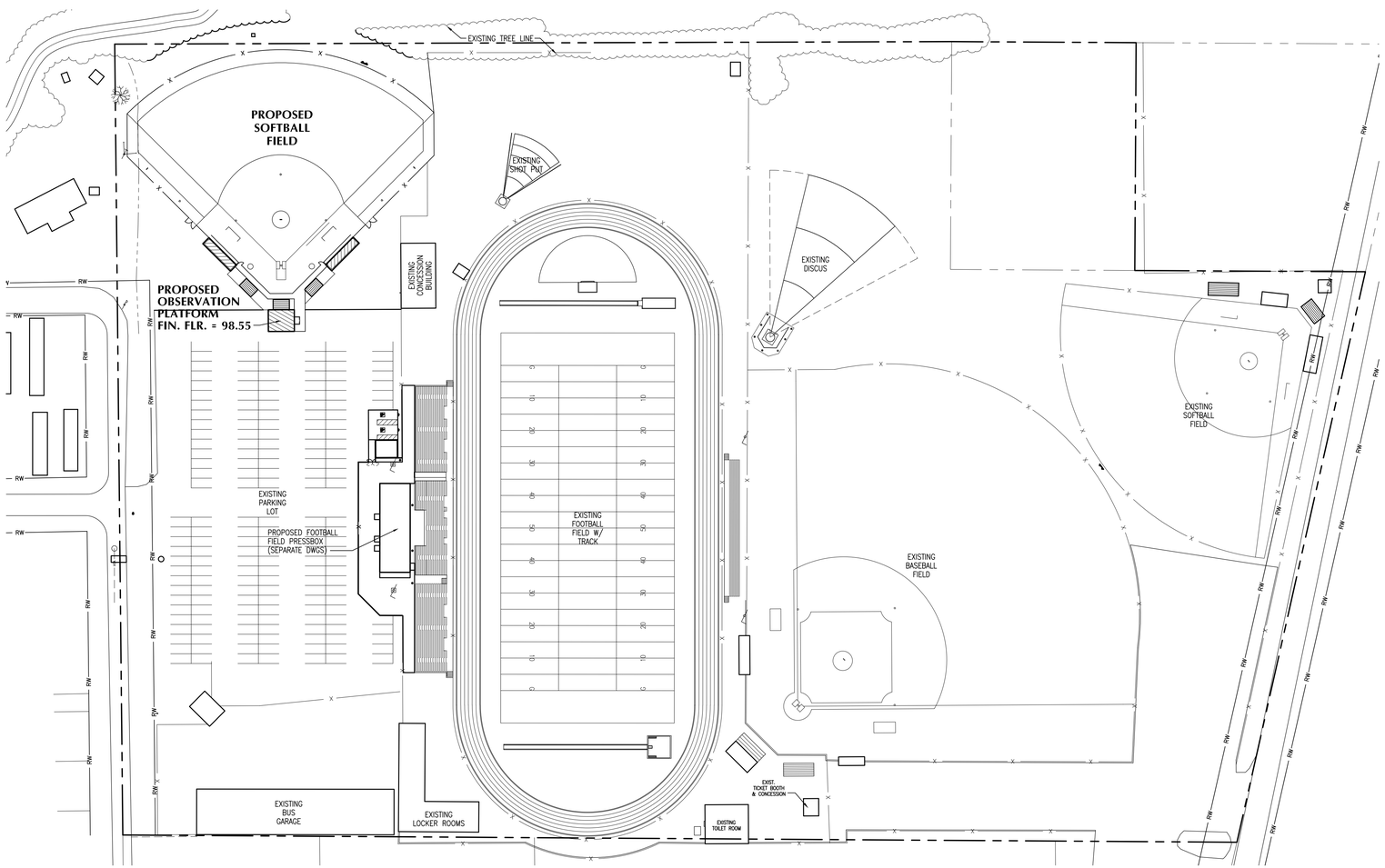


1 C-101 SITE PLAN
SCALE: 1"=60'

### LIST OF DRAWINGS


| | |
|---|---|
| C-101 | COVER SHEET, SITE PLAN, CODE INFORMATION |
| A-101 | FOUNDATION PLAN, FRAMING PLANS, FLOOR PLANS, ROOM FINISH SCHEDULE, DOOR SCHEDULE AND DETAILS |
| A-102 | EXTERIOR ELEVATIONS, BUILDING SECTION, AND DETAILS |
| A-103 | BUILDING SECTION AND DETAILS |
| E-101 | POWER PLANS, LIGHTING PLANS, RISER DIAGRAM, PANEL SCHEDULE, AND DETAILS |


### BUILDING CODE INFORMATION

| | | | |
|---|---|---|---|
| **Building Code** | 2017 OBC (2015 IBC) | | |
| **Electrical Code** | 2017 NEC | | |
| **Accessibility Code** | 2009 ICC/ANSI A117.1/Chap. 11; 2017 OBC | | |
| **Use Group** | Non-Separated mixed use | | |
| | First Floor (sporting goods storage) | S-2 | |
| | Second Floor (Observation Platform) | A-5 | |
| **Construction Type** | | VB | |
| **Height and Area Limitations** | | | |
| | Allowable Building Height Above Grade S2, VB | 40' / 2 | stories |
| | Allowable Building Area per Story S2, VB | 13,500 | SF |
| | Frontage Increase | 6,750 | SF |
| | Automatic Sprinkler System Increase | 0 | SF |
| | **Total Allowable Building Area** | **20,250** | **SF** |
| **Building Height and Area Information** | | | |
| | Building Height Above Grade | 21 | Ft |
| | First Floor | 480 | SF |
| | Second Floor | 480 | SF |
| | **Total** | **960** | **SF** |
| **Occupant Load** | First Floor (1 per 300) | 2 | |
| | Second Floor (1 per 15 net) | 22 | |
| | **Total** | **24** | Occ. |

* This facility is for seasonal use, on short-term basis and not intended for the purpose of human comfort OBC 1204.1; Excption 1

### STRUCTURAL DESIGN CRITERIA

| | | | |
|---|---|---|---|
| Soil Bearing Capacity | | | |
| | Wall Footings | 1500 | psf |
| Concrete Strength (f'c) | | 4000 | psi |
| Risk Category | | II | |
| Exposure Category | | B | |
| Floor Live Load, non-reduced | | | |
| | Uniform Live Load | 100 | psf |
| | Concentrated Load | 1,000 | lbs |
| Floor Dead Load | | 10 | psf |
| Total Floor Load | | 110 | psf |
| Roof Live Load | | 30 | psf |
| Roof Snow Load | | | |
| | Ground Snow Load | 20 | psf |
| | Snow Exposure Factor | 1.0 | |
| | Snow Importance Factor | 1.0 | |
| | Thermal Factor | 1.1 | |
| | Flat Roof Snow Load | 22 | psf |
| Roof Dead Load | | 25 | psf |
| Total Roof Load | | 55 | psf |
| Wind Loads | | | |
| | Basic Wind Speed | 115 | mph |
| | Wind Importance Factor | 1.00 | |
| | Internal Pressure Coefficient | +0.18 -0.18 | |
| | Component/Cladding Pressure | | |
| | Roof | +9.7 -27.9 | psf |
| | Wall | +20.3 -22.3 | psf |
| | Roof Overhang | -44.5 | psf |
| Earthquake Design Data | | | |
| | Seismic Importance Factor | 1.00 | |
| | Spectral Response Acceleration $S_S$ | 0.140 | |
| | Spectral Response Acceleration $S_1$ | 0.061 | |
| | Site Class | D | |
| | Spectral Response Coefficient $S_{DS}$ | 0.149 | |
| | Spectral Response Coefficient $S_{D1}$ | 0.098 | |
| | Seismic Design Category | A | |
| | Basic Seismic Force Resisting System | | |
| | Bearing Wall System | | |
| | Response Modification Factor R | 4.0 | |
| | Seismic Response Coefficient $C_S$ | 0.04 | |
| | Effective Seismic Weight | 20 | kips |
| | Design Base Shear | 1 | kips |
| | Analysis Procedure: Equivalent Lateral Force Procedure | | |

### LOCATION MAP

701-1/2 WEST FIRST STREET • DEFIANCE • OHIO • 43512 • PHONE • 419•782•6211 • architects@beilharzinc.com


STATE OF OHIO
KRAIG A. BEILHARZ
9482
REGISTERED ARCHITECT

KRAIG A. BEILHARZ, LICENSE #9482
EXPIRATION DATE: 12/31/2021

BEILHARZ ARCHITECTS INCORPORATED

PLOT SCALE
1"=60'
0 30' 60' 90'
FOR SHEET SIZE 24"x36"

ISSUE DATE

| | |
|---|---|
| 1 | 01-08-20 OWNER REVIEW |
| 2 | 01-22-20 FOR PERMITS/BIDS |


© 2020 BEILHARZ ARCHITECTS, INC.
THE CONTENT OF THIS DRAWING IS NOT INTENDED TO BE SUITABLE FOR USE OR REUSE BY INDIVIDUALS, COMPANIES, CORPORATIONS, OR OTHER ENTITIES FOR ANY PURPOSE OTHER THAN THE INTENDED PURPOSE OF THIS DOCUMENT, NOR FOR USE ON ANY OTHER PROJECT. ANY REUSE OR REPRODUCTION WITHOUT WRITTEN VERIFICATION AND ADAPTATION BY THE ARCHITECT FOR THE SPECIFIC PURPOSE INTENDED SHALL BE AT THE USER'S SOLE RISK AND WITHOUT LIABILITY OR LEGAL EXPOSURE TO THE ARCHITECT


**PAULDING E.V. SCHOOLS**
SOFTBALL FIELD OBSERVATION PLATFORM
755 NORTH WATER STREET
PAULDING, OHIO 45879

COVER SHEET
CODE INFORMATION

PROJECT: B9-4650 OP

DRAWN BY: JH, SLB

CHECKED BY: KAB

SHEET

**C-101**

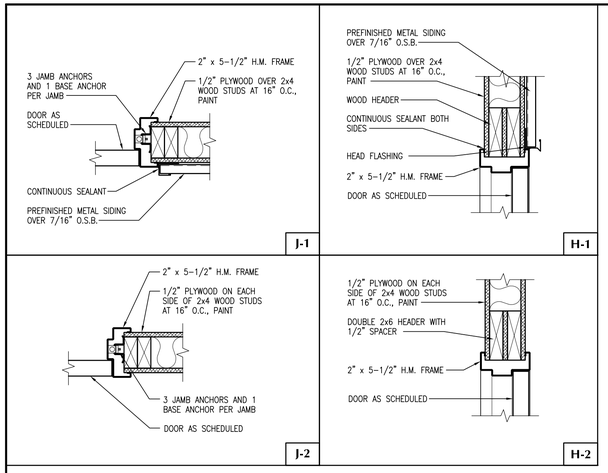


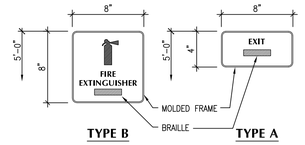


## INTERIOR SIGN TYPES

SCALE: 1 1/2"=1'-0"

## ROOM FINISH SCHEDULE

| | ROOM | FLOOR | BASE | WALLS | | | | | | | | CEILING | | | NOTES |
|---|---|---|---|---|---|---|---|---|---|---|---|---|---|---|---|
| | | | | N | | S | | E | | W | | | | | |
| | | MATL | MATL | MATL | FIN | MATL | FIN | MATL | FIN | MATL | FIN | MATL | FIN | HEIGHT | |
| 101 | Storage | EC | - | PW | P1 | PW | P1 | PW | P1 | PW | P1 | LP | P2 | - | 1 |
| 201 | Observation Platform | ES | - | PW | P1 | PW | P1 | PW | P1 | PW | P1 | LP | P2 | - | 2 |

| FLOOR MATERIAL LEGEND | | WALL MATERIAL LEGEND | | FINISH LEGEND | | NOTES LEGEND | |
|---|---|---|---|---|---|---|---|
| EC | Exposed Concrete | PW | Plywood | P1 | Paint, Eggshell | 1 | Provide sheathing at stair |
| ES | Exposed Subfloor | | | P1 | Paint, Flat | 2 | Install batt insulation in ceiling |
| | | CEILING MATERIAL LEGEND | | | | | |
| | | LP | Metal liner Panel | | | | |

## DOOR SCHEDULE

| MARK | DOOR | | | | | FRAME | | HDW SET | NOTES |
|---|---|---|---|---|---|---|---|---|---|
| | SIZE | | MATL | ELEV | MATL | DETAIL | | | |
| | W | H | | | | HEAD | JAMB | | |
| 101 | Pr. 3'-0" | 7'-0" | HMT | B | HM | H-1 | J-1 | 1 | |
| 201 | 3'-0" | 7'-0" | HM | A | HM | H-2 | J-2 | 2 | |

| MATERIAL LEGEND | | NOTES LEGEND |
|---|---|---|
| HM | Hollow Metal | |
| HMT | Hollow Metal, thermal insulated | |

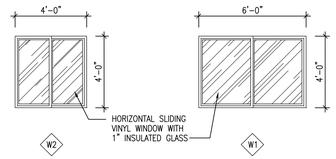


## WINDOW ELEVATIONS

SCALE: 1/4"=1'-0"

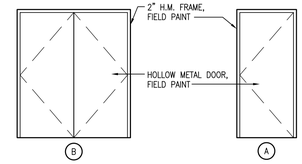


## DOOR ELEVATIONS

SCALE: 1/4"=1'-0"

## GENERAL NOTES

1. ALL FRAMING SHALL BE AT 16" O.C., UNLESS NOTED OTHERWISE.
2. EXTERIOR DIMENSIONS ARE TO OUTSIDE FACE OF SHEATHING AND EDGE OR CENTERLINE OF ROUGH OPENING UNLESS NOTED OTHERWISE.
3. INTERIOR DIMENSIONS ARE TO FACE OF STUD.
4. ALL WALLS ARE 2x4 STUDS.
5. ALL WOOD FRAMING MEMBERS IN DIRECT CONTACT WITH CONCRETE OR MASONRY SHALL BE PRESERVATIVE TREATED
6. VERIFY LOCATION OF UTILITY LINES PRIOR TO BEGINNING NEW CONSTRUCTION.

## GENERAL SIGNAGE NOTES

1. SIGN TEXT SHALL BE 5/8" HIGH, RAISED 1/32" U.N.O.
2. BRAILLE SHALL BE CONTRACTED (GRADE 2).
3. BRAILLE SHALL BE POSITIONED BELOW THE CORRESPONDING TEXT. IF TEXT IS MULTI-LINED, BRAILLE SHALL BE PLACED BELOW THE ENTIRE TEXT. BRAILLE SHALL BE SEPARATED 3/8" MIN. FROM ANY OTHER TACTILE CHARACTER AND 3/8" MIN. FROM RAISED BORDERS AND DECORATIVE ELEMENTS.
4. INSTALL SIGN ON WALL ADJACENT TO LATCH SIDE OF DOOR, OR ON THE NEAREST ADJACENT WALL, WITH A MINIMUM CLEAR FLOOR SPACE OF 18" BY 18".

## GENERAL DOOR NOTES

1. THE DOOR LATCH SHALL RELEASE WHEN SUBJECTED TO A 15 LB FORCE. THE DOOR SHALL BE SET IN MOTION WHEN SUBJECTED TO A 30 LB FORCE. THE DOOR SHALL SWING TO A FULL-OPEN POSITION WHEN WHEN SUBJECTED TO A 15 LB FORCE. FORCES SHALL BE APPLIED TO THE LATCH SIDE.
2. TYPICAL DOOR THICKNESS IS 1-3/4" U.N.O.
3. FIELD VERIFY ALL OPENING DIMENSIONS
4. FRAMES SHALL HAVE CONTINUOUS SEALANT, BOTH SIDES OF OPENING

## KEYNOTE LEGEND

1. WALL MOUNTED FIRE EXTINGUISHER, 10 lb., 4A-60BC TYPE. NFPA 10, UL RATED, FM APPROVED. PROVIDE SIGN TYPE B, THIS SHEET
2. WALL-MOUNTED STEEL HANDRAIL WITH SUPPORT BRACKETS AT 5'-0" O.C. (MAX.), RETURN RAIL ENDS TO WALL, FIELD PAINT.
3. PREFINISHED METAL DOWN PIPE (2"x3")
4. 10' #5 REBAR FOR ELECTRICAL SERVICE GROUNDING, SEE DETAIL 6/E-101
5. EXIT DESIGNATION, SIGN TYPE A THIS SHEET
6. BUILDING ANCHORS: 1/2"ø ANCHOR BOLT 12" LONG WITH WITH COUPLER(S) NUT FROM ANCHOR BOLT TO THREADED ROD(S) WITH STU 1/2 SIMPSON TAKE-UP WASHER AT UPPER MOST TOP PLATE OF WALL
7. THICKENED SLAB, SEE DETAIL 2/A-103
8. ELECTRICAL CONDUIT, VERIFY LOCATION WITH ELECTRICIAN
9. PROVIDE SLEEVE FOR ELECTRICAL
10. HOLD TOP OF FOUNDATION DOWN 8" AT OPENING
11. PLASTIC LAMINATE COUNTERTOP WITH PREFINISHED METAL SUPPORT BRACKETS, SEE DETAIL 1/A-103
12. 2 1/2"ø PLASTIC GROMMET, VERIFY EXACT LOCATION WITH OWNER

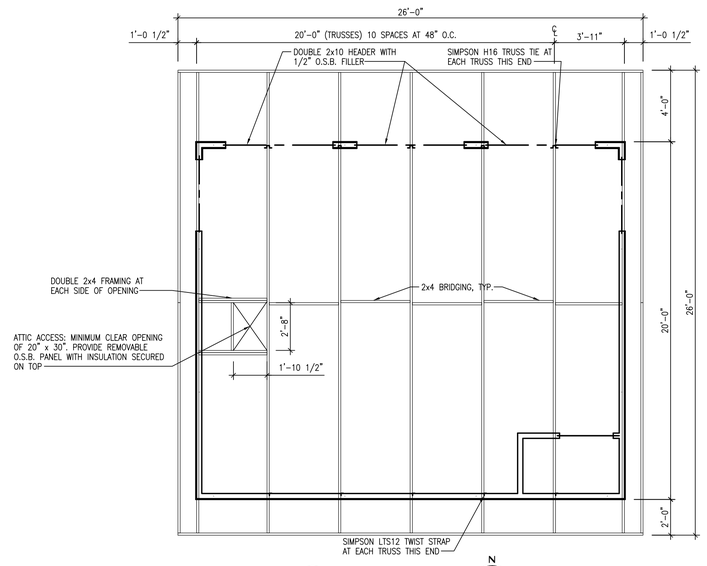


5 A-101 **ROOF FRAMING PLAN**
SCALE: 1/4"=1'-0"

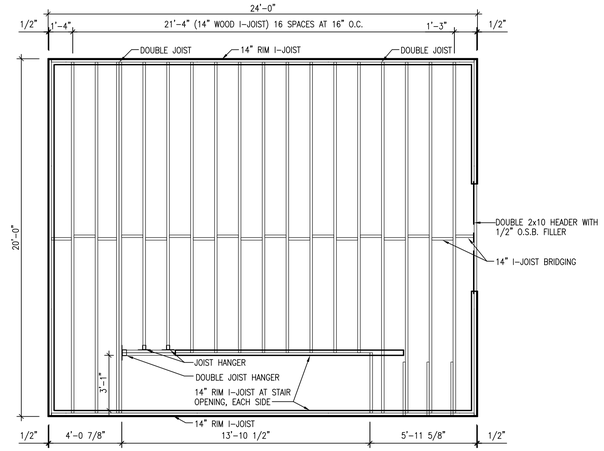


4 A-101 **SECOND FLOOR FRAMING PLAN**
SCALE: 1/4"=1'-0"

## LEGEND

| | |
|---|---|
| # | WINDOW, SEE SCHEDULE THIS SHEET AND EXTERIOR ELEVATIONS |
| # | DOOR, SEE SCHEDULE THIS SHEET |
| NAME # | ROOM, SEE THIS SHEET FOR ROOM FINISH SCHEDULE |
| | WOOD STUD WALL |

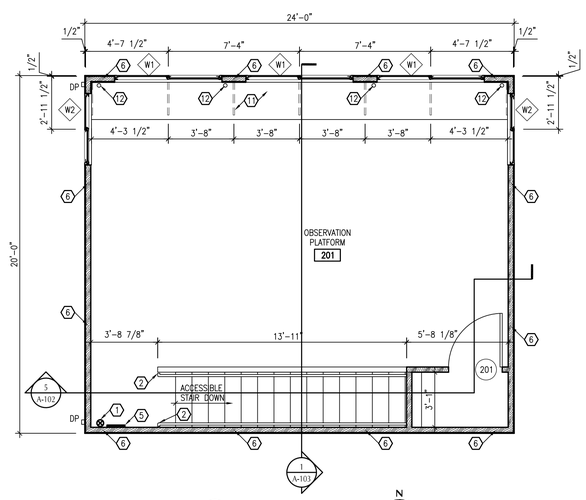


3 A-101 **SECOND FLOOR PLAN**
SCALE: 1/4"=1'-0"

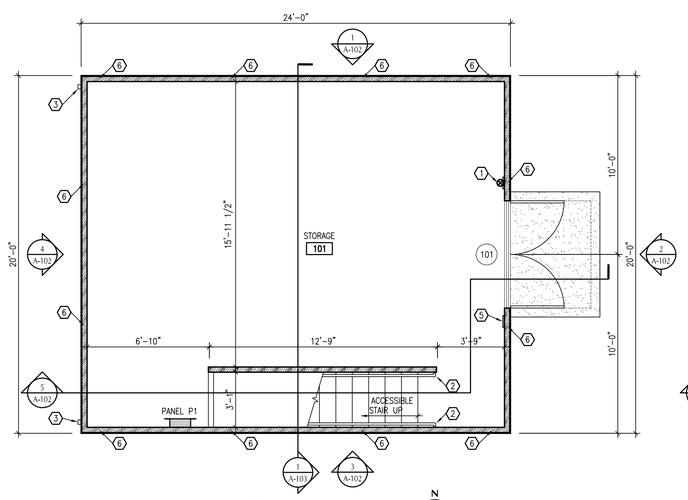


2 A-101 **FIRST FLOOR PLAN**
SCALE: 1/4"=1'-0"

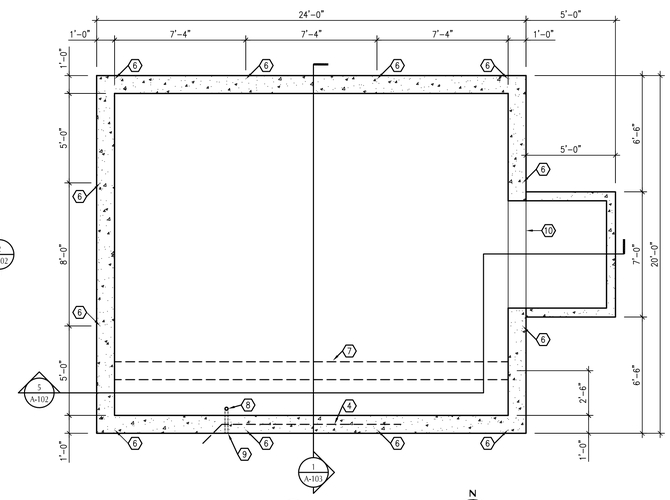


1 A-101 **FOUNDATION PLAN**
SCALE: 1/4"=1'-0"

701-1/2 WEST FIRST STREET • DEFIANCE • OHIO • 43512 • PHONE • 419 • 782 • 6211 • architects@beilharzinc.com

STATE OF OHIO
KRAIG A. BEILHARZ
9482
REGISTERED ARCHITECT

KRAIG A. BEILHARZ, LICENSE #9482
EXPIRATION DATE: 12/31/2021

B|A
BEILHARZ
ARCHITECTS INCORPORATED

PLOT SCALE
1/4"=1'-0"
0 2' 4' 6'
FOR SHEET SIZE 24"x36"

| ISSUE DATE | |
|---|---|
| 1 | 01-08-20 OWNER REVIEW |
| 2 | 01-22-20 FOR PERMITS/BIDS |

© 2020 BEILHARZ ARCHITECTS, INC.
THE CONTENT OF THIS DRAWING IS NOT INTENDED TO BE SUITABLE FOR USE OR REUSE BY INDIVIDUALS, COMPANIES, CORPORATIONS, OR OTHER ENTITIES FOR ANY PURPOSE OTHER THAN THE INTENDED PURPOSE OF THIS DOCUMENT, NOR FOR USE ON ANY OTHER PROJECT. ANY REUSE OR REPRODUCTION WITHOUT WRITTEN VERIFICATION AND ADAPTATION BY THE ARCHITECT FOR THE SPECIFIC PURPOSE INTENDED SHALL BE AT THE USER'S SOLE RISK AND WITHOUT LIABILITY OR LEGAL EXPOSURE TO THE ARCHITECT

# PAULDING E.V. SCHOOLS

SOFTBALL FIELD OBSERVATION PLATFORM
755 NORTH WATER STREET
PAULDING, OHIO 45879

FOUNDATION PLAN
FLOOR PLANS
FRAMING PLANS
ROOM FINISH SCHEDULE
DOOR SCHEDULE

PROJECT: B9-4650 OP
DRAWN BY: SLB
CHECKED BY: KAB

SHEET
**A-101**

## KEYNOTE LEGEND

1. PREFINISHED VERTICAL METAL SIDING, WITH ALL ASSOCIATED TRIM.
2. PREFINISHED ALUMINUM FASCIA/RAKE COVER.
3. PREFINISHED CORRUGATED METAL ROOF SYSTEM WITH ALL ASSOCIATED TRIM ON 2x4 PURLINS AT 24" O.C. OVER TRUSSES AT 48" O.C.
4. PREFINISHED METAL GUTTER (5"x2 3/4").
5. PREFINISHED METAL DOWN PIPE (2"x3").
6. DOWN PIPE ADAPTER, SEE DETAIL 9/A-102
7. LIGHT FIXTURE, REFER TO ELECTRICAL

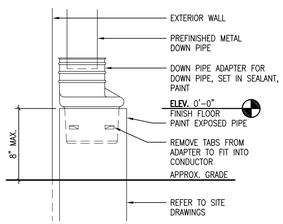


9 A-102 **DOWN PIPE DETAIL**
SCALE: 3"=1'-0"

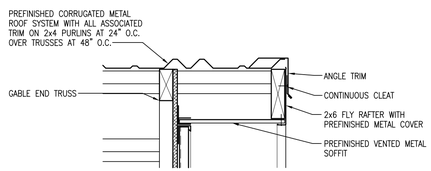


8 A-102 **ROOF DETAIL**
SCALE: 1 1/2"=1'-0"

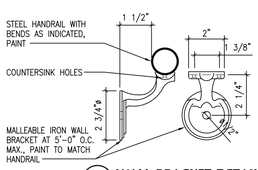


7 A-102 **WALL BRACKET DETAIL**
SCALE: NONE

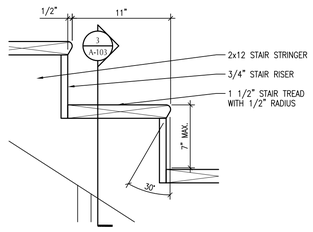


6 A-102 **STAIR TREAD DETAIL**
SCALE: 1 1/2"=1'-0"

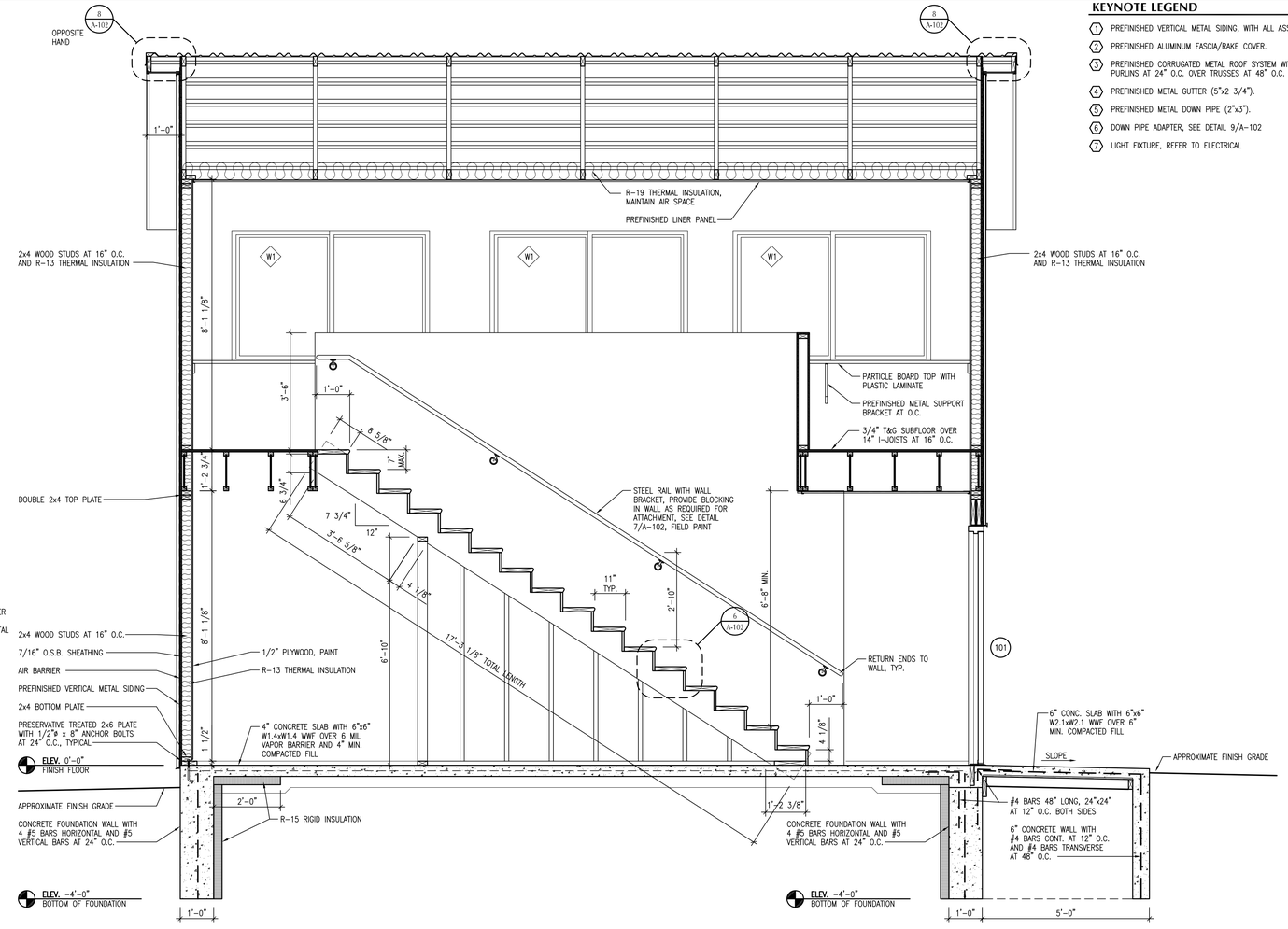


5 A-101 **BUILDING SECTION**
SCALE: 1/2"=1'-0"

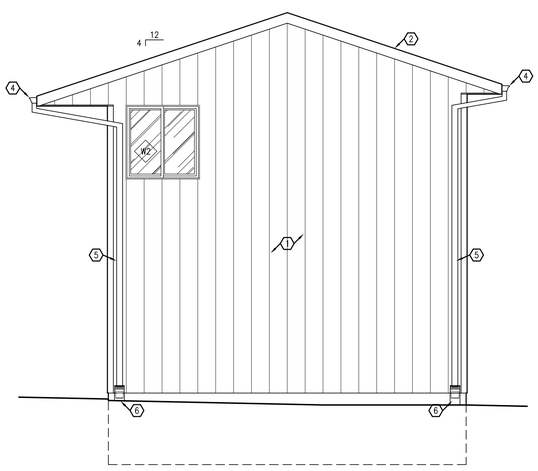


4 A-101 **WEST ELEVATION**
SCALE: 1/4"=1'-0"

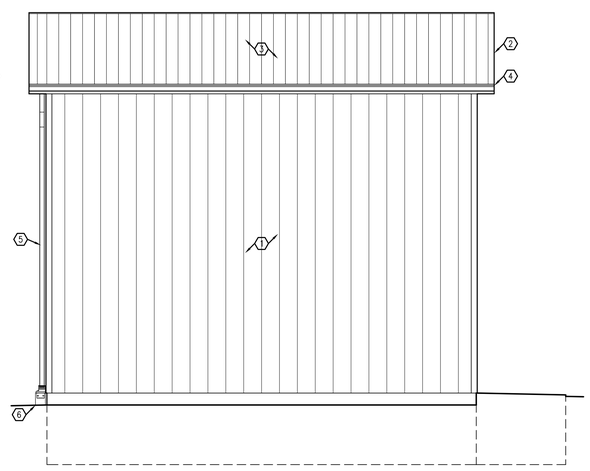


3 A-101 **SOUTH ELEVATION**
SCALE: 1/4"=1'-0"

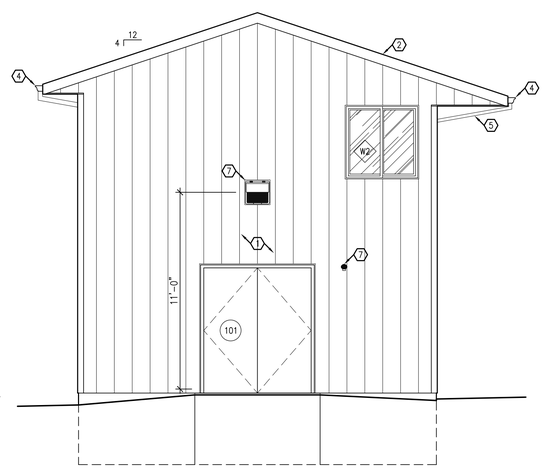


2 A-101 **EAST ELEVATION**
SCALE: 1/4"=1'-0"

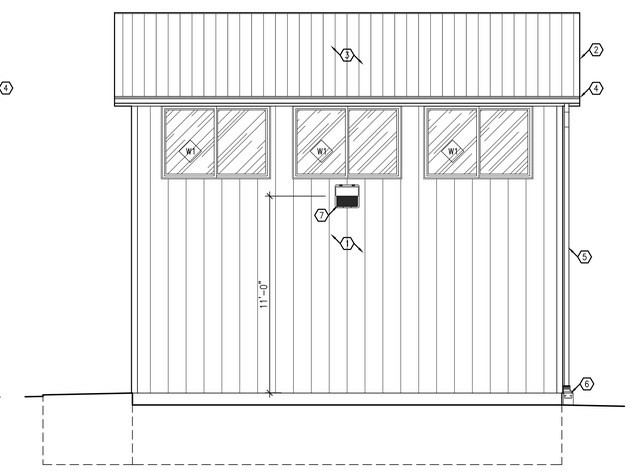


1 A-101 **NORTH ELEVATION**
SCALE: 1/4"=1'-0"


701-1/2 WEST FIRST STREET • DEFIANCE • OHIO • 43512 • PHONE • 419•782•6211 • architects@beilharzinc.com


STATE OF OHIO
KRAIG A. BEILHARZ
9482
REGISTERED ARCHITECT


KRAIG A. BEILHARZ, LICENSE #9482
EXPIRATION DATE: 12/31/2021

BEILHARZ
ARCHITECTS INCORPORATED


PLOT SCALE
1/4"=1'-0"
0 2' 4' 6'
FOR SHEET SIZE 24"x36"

ISSUE DATE

| | |
|---|---|
| 1 | 01-08-20 OWNER REVIEW |
| 2 | 01-22-20 FOR PERMITS/BIDS |


© 2020 BEILHARZ ARCHITECTS, INC.
THE CONTENT OF THIS DRAWING IS NOT INTENDED TO BE SUITABLE FOR USE OR REUSE BY INDIVIDUALS, COMPANIES, CORPORATIONS, OR OTHER ENTITIES FOR ANY PURPOSE OTHER THAN THE INTENDED PURPOSE OF THIS DOCUMENT, NOR FOR USE ON ANY OTHER PROJECT. ANY REUSE OR REPRODUCTION WITHOUT WRITTEN VERIFICATION AND ADAPTATION BY THE ARCHITECT FOR THE SPECIFIC PURPOSE INTENDED SHALL BE AT THE USER'S SOLE RISK AND WITHOUT LIABILITY OR LEGAL EXPOSURE TO THE ARCHITECT


# PAULDING E.V. SCHOOLS

SOFTBALL FIELD OBSERVATION PLATFORM
755 NORTH WATER STREET
PAULDING, OHIO 45879

EXTERIOR ELEVATIONS
BUILDING SECTION
DETAILS

PROJECT: B9-4650 OP
DRAWN BY: SLB
CHECKED BY: KAB

SHEET
**A-102**

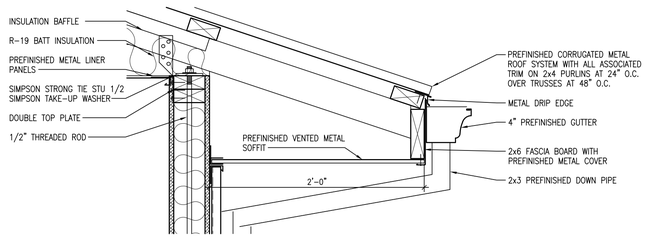


1 A-103 **ROOF DETAIL**
SCALE: 1 1/2"=1'-0"

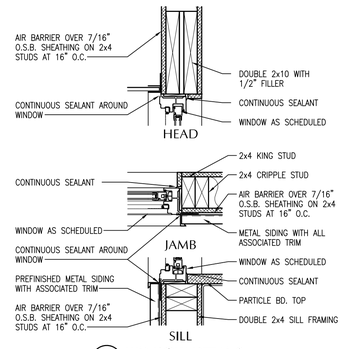


4 A-101 **WINDOW DETAILS**
SCALE: 1 1/2"=1'-0"

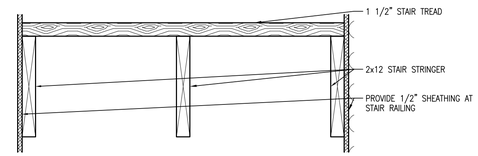


3 A-101 **STAIR TREAD/STRINGER DETAIL**
SCALE: 1 1/2"=1'-0"

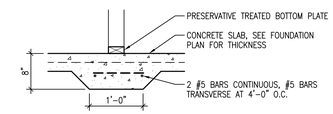


1 A-102 **THICKENED SLAB DETAIL**
SCALE: 3/4"=1'-0"

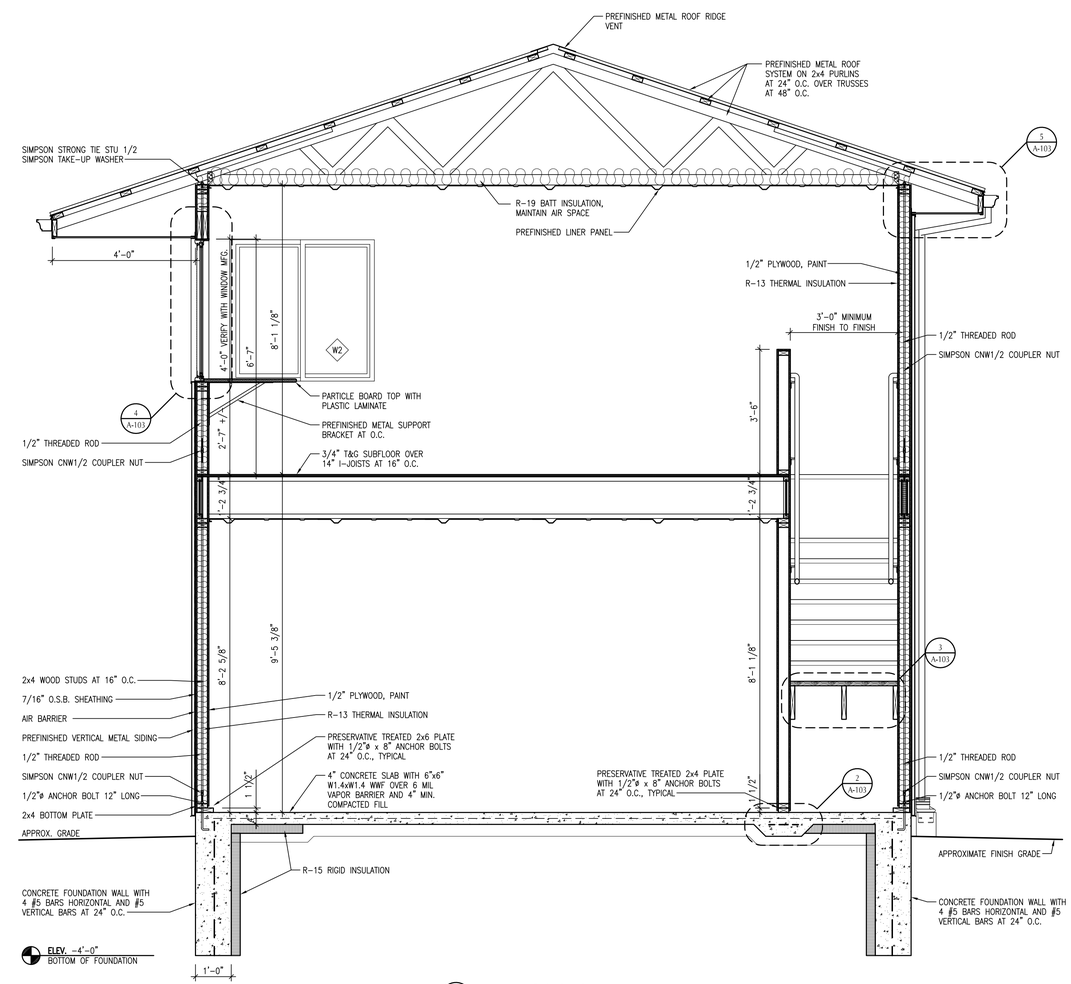


1 A-101 **BUILDING SECTION**
SCALE: 1/2"=1'-0"

701-1/2 WEST FIRST STREET • DEFIANCE • OHIO • 43512 • PHONE • 419 • 782 • 6211 • architects@beilharzinc.com

STATE OF OHIO
KRAIG A. BEILHARZ
9482
REGISTERED ARCHITECT

KRAIG A. BEILHARZ, LICENSE #9482
EXPIRATION DATE: 12/31/2021

BEILHARZ
ARCHITECTS INCORPORATED

PLOT SCALE
1/2"=1'-0"
0 1' 2' 3'
FOR SHEET SIZE 24"x36"

| ISSUE DATE | |
|---|---|
| 1 | 01-08-20 OWNER REVIEW |
| 2 | 01-22-20 FOR PERMITS/BIDS |

© 2020 BEILHARZ ARCHITECTS, INC.
THE CONTENT OF THIS DRAWING IS NOT INTENDED TO BE SUITABLE FOR USE OR REUSE BY INDIVIDUALS, COMPANIES, CORPORATIONS, OR OTHER ENTITIES FOR ANY PURPOSE OTHER THAN THE INTENDED PURPOSE OF THIS DOCUMENT, NOR FOR USE ON ANY OTHER PROJECT. ANY REUSE OR REPRODUCTION WITHOUT WRITTEN VERIFICATION AND ADAPTATION BY THE ARCHITECT FOR THE SPECIFIC PURPOSE INTENDED SHALL BE AT THE USER'S SOLE RISK AND WITHOUT LIABILITY OR LEGAL EXPOSURE TO THE ARCHITECT

# PAULDING E.V. SCHOOLS

SOFTBALL FIELD OBSERVATION PLATFORM
755 NORTH WATER STREET
PAULDING, OHIO 45879

BUILDING SECTION DETAILS

PROJECT: B9-4650 OP
DRAWN BY: SLB
CHECKED BY: KAB

SHEET
**A-103**

## LIGHT FIXTURE SCHEDULE

| MARK | DESCRIPTION | LAMPS TYPE | VOLT | NO. | LUMENS | WATTS | COLOR | BASIS FOR DESIGN MANUF. | MODEL NO. | FINISH | NOTES |
|---|---|---|---|---|---|---|---|---|---|---|---|
| A1 | 1x4 Surface Mount | LED | 120 | 1 | 3000 | 26.7 | 3500K | Lithonia | SLT4 ADP | White | |
| A2 | 48" Striplight | LED | 120 | 1 | 4600 | 35 | 3500K | Lithonia | CDS | White | |
| E1 | Exit/Unit Combo, HO | LED | 120 | 2 | - | 3.3 | - | Lithonia | LHQM LED R HO | White | 1 |
| E2 | Weather-proof Remote Head | LED | 120 | 1 | - | 1.5 | - | Lithonia | ELA QWP L0309 | White | 2,3 |
| E3 | Emergency Light | LED | 120 | 2 | 1100 | 10.6 | - | Lithonia | ELM6L UVOLT LTP | White | 1 |
| W1 | Die-Cast Wall Pack | LED | 120 | 1 | 6984 | 72 | 4000K | Lithonia | TWH LED 20C 1000 T3M PE | Alum. | 4 |

**NOTES LEGEND**

1. 90-minute battery backup (min.)
2. Interconnect to exit/unit combo with high output battery for 90-min. backup
3. NEMA 3R installation on weather-proof box.
4. Refer to Exterior Elevations for mounting height

## NEW PANEL P1 SCHEDULE

| | | | | | | | | | |
|---|---|---|---|---|---|---|---|---|---|
| 120/ 240 | VOLTS | | | AMPS | 100 | | TYPE | QO | |
| | 1 PHASE | | | MAIN | Breaker | | MOUNTING | Surface | |
| | 3 WIRE | | | | | | NEMA CABINET | 1 | |
| NO | BREAKER | DESCRIPTION | KVA | A | B | KVA | DESCRIPTION | BREAKER | NO |
| 1 | 40A2P | Softball Score Board | 0.96 | 2.04 | | 1.08 | Recpt. 101, Ext. | 20A1P | 2 |
| 3 | \| | \| | 0.96 | | 1.86 | 0.90 | Recept. 201 | 20A1P | 4 |
| 5 | 20A1P | Spare | 0.00 | 0.90 | | 0.90 | Recept. 201 | 20A1P | 6 |
| 7 | 20A1P | Int/Ext ltg. | 0.32 | | 0.32 | 0.00 | Spare | 20A1P | 8 |
| 9 | | | | 0.00 | | | | | 10 |
| 11 | | | | | 0.00 | | | | 12 |
| 13 | | | | 0.00 | | | | | 14 |
| 15 | | | | | 0.00 | | | | 16 |
| 17 | | | | 0.00 | | | | | 18 |
| 19 | | | | | 0.00 | | | | 20 |
| | | | SUBTOTALS | 2.94 | 2.18 | | | | |
| | | | TOTAL LOAD | 5.12 | KVA | 21.3 | AMPS | | |

## EXISTING CS1 SCHEDULE

| | | | | | | | | | |
|---|---|---|---|---|---|---|---|---|---|
| 120/ 240 | VOLTS | | | AMPS | 200 | | TYPE | QO | |
| | 1 PHASE | | | MAIN | Breaker | | MOUNTING | Surface | |
| | 3 WIRE | | | | | | NEMA CABINET | 1 | |
| NO | BREAKER | DESCRIPTION | KVA | A | B | KVA | DESCRIPTION | BREAKER | NO |
| 1 | Exist | 20A1P | 0.00 | 0.00 | | 0.00 | Space | Exist | 2 |
| 3 | Exist | 20A1P | 0.00 | | 0.00 | 0.00 | | 20A1P Exist | 4 |
| 5 | Exist | 20A1P | 0.00 | 1.44 | | 1.44 | Heat | 30A2P Exist | 6 |
| 7 | Exist | 20A1P | 0.00 | | 1.44 | 1.44 | \| | \| | 8 |
| 9 | Exist | 100A2P | Panel CS2 | 5.70 | | 0.00 | | Exist | 10 |
| 11 | \| | \| | 6.00 | | 7.44 | 1.44 | Water Heater | 30A2P Exist | 12 |
| 13 | Exist | 20A1P | 0.00 | 1.44 | | 1.44 | \| | \| | 14 |
| 15 | Exist | 20A1P | 0.00 | | 0.00 | 0.00 | | 20A1P Exist | 16 |
| | | | SUBTOTALS | 8.58 | 8.88 | | | | |
| | | | TOTAL LOAD | 17.46 | KVA | 72.7 | AMPS | | |

## EXISTING CS2 SCHEDULE

| | | | | | | | | | |
|---|---|---|---|---|---|---|---|---|---|
| 120/ 240 | VOLTS | | | AMPS | 100 | | TYPE | QO | |
| | 1 PHASE | | | MAIN | Breaker | | MOUNTING | Surface | |
| | 3 WIRE | | | | | | NEMA CABINET | 1 | |
| NO | BREAKER | DESCRIPTION | KVA | A | B | KVA | DESCRIPTION | BREAKER | NO |
| 1 | Exist | 100A2P | Main Breaker | 0.00 | 0.18 | | 0.18 | Recept. | 20A1P Exist 2 |
| 3 | \| | \| | \| | 0.00 | | 0.00 | 0.00 | Space | 4 |
| 5 | Exist | 20A1P | Recept. | 0.72 | 1.22 | | 0.50 | Recept. | 20A1P Exist 6 |
| 7 | Exist | 20A1P | Recept. | 0.72 | | 1.44 | 0.72 | Recept. | 20A1P Exist 8 |
| 9 | Exist | 20A1P | Recept. | 0.72 | 1.22 | | 0.50 | Recept. | 20A1P Exist 10 |
| 11 | Exist | 20A1P | Recept. | 0.90 | | 1.62 | 0.72 | Recept. | 20A1P Exist 12 |
| 13 | Exist | 20A1P | Recept. | 0.72 | 0.90 | | 0.18 | Recept. | 20A1P Exist 14 |
| 15 | | | Space | | 0.00 | | | Space | 16 |
| 17 | | | Space | | 0.00 | | | Space | 18 |
| 19 | | | Space | | | 0.00 | | Space | 20 |
| 21 | | | Space | | 0.00 | | | Space | 22 |
| 23 | | | Space | | | 0.00 | | Space | 24 |
| 25 | | | Space | | 0.00 | | | Space | 26 |
| 27 | 100G | 100A2P | PANEL P1 | 2.94 | | 2.94 | | Space | 28 |
| 29 | \| | \| | \| | 2.18 | 2.18 | | | Space | 30 |
| 31 | | | Space | | | 0.00 | | Space | 32 |
| | | | SUBTOTALS | 5.70 | 6.00 | | | | |
| | | | TOTAL LOAD | 11.70 | KVA | 48.7 | AMPS | | |

## CONDUIT AND WIRE SCHEDULE

| 1 PH, 2 WIRE, GROUND | | | | | 1PH OR 3 PH, 3 WIRE, GROUND | | | | | 3 PHASE, 4 WIRE, GROUND | | | | |
|---|---|---|---|---|---|---|---|---|---|---|---|---|---|---|
| MARK | SETS | WIRE | GROUND | CONDUIT | MARK | SETS | WIRE | GROUND | CONDUIT | MARK | SETS | WIRE | GROUND | CONDUIT |
| 20SG | 1 | 2 #12 | 1 #12 | 1/2" | 20G | 1 | 3 #12 | 1 #12 | 3/4" | 20NG | 1 | 4 #12 | 1 #12 | 3/4" |
| 30SG | 1 | 2 #10 | 1 #10 | 1/2" | 30G | 1 | 3 #10 | 1 #10 | 3/4" | 30NG | 1 | 4 #10 | 1 #10 | 3/4" |
| 50SG | 1 | 2 #8 | 1 #10 | 1" | 50G | 1 | 3 #8 | 1 #10 | 1" | 50NG | 1 | 4 #8 | 1 #10 | 1" |
| 60SG | 1 | 2 #6 | 1 #10 | 1" | 60G | 1 | 3 #6 | 1 #10 | 1" | 60NG | 1 | 4 #6 | 1 #10 | 1 1/4" |
| 80SG | 1 | 2 #4 | 1 #8 | 1" | 80G | 1 | 3 #4 | 1 #8 | 1" | 80NG | 1 | 4 #4 | 1 #8 | 1 1/4" |
| 100SG | 1 | 2 #2 | 1 #8 | 1 1/4" | 100G | 1 | 3 #2 | 1 #8 | 1 1/4" | 100NG | 1 | 4 #2 | 1 #8 | 1 1/2" |

Adjust conduit and wire sizes in accordance with NEC for runs longer than 100 feet to prevent substantial voltage drop.

## WIRE SIZING TABLE

| 120V–20A BRANCH CIRCUITS DISTANCE A+B IN FEET | AWG SIZE FOR ENTIRE CIRCUIT (USE COPPER WIRE IN METALLIC CONDUIT, SIZE CONDUIT ACCORDINGLY) |
|---|---|
| 0' TO 100' | # 12 (MIN.) |
| 100' TO 175' | # 10 |
| 175' TO 300' | # 8 |
| 300' TO 450' | # 6 (MAX.) |

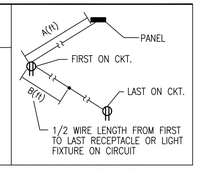


THIS TABLE IS BASED ON AN EVENLY DISTRIBUTED LOAD ALLOWING A 3% VOLTAGE DROP AT LAST OUTLET; APPLY ACCORDINGLY.

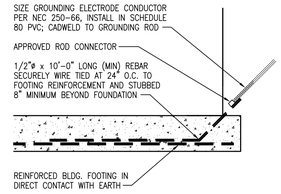


FOOTING GROUND

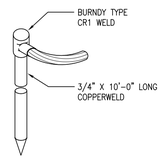


GROUNDING ROD

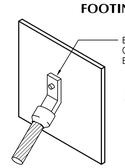


EQUIPMENT GROUND

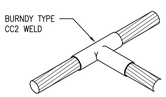


CABLE JUNCTION

6 E-101 **GROUNDING DETAILS**
SCALE: NONE

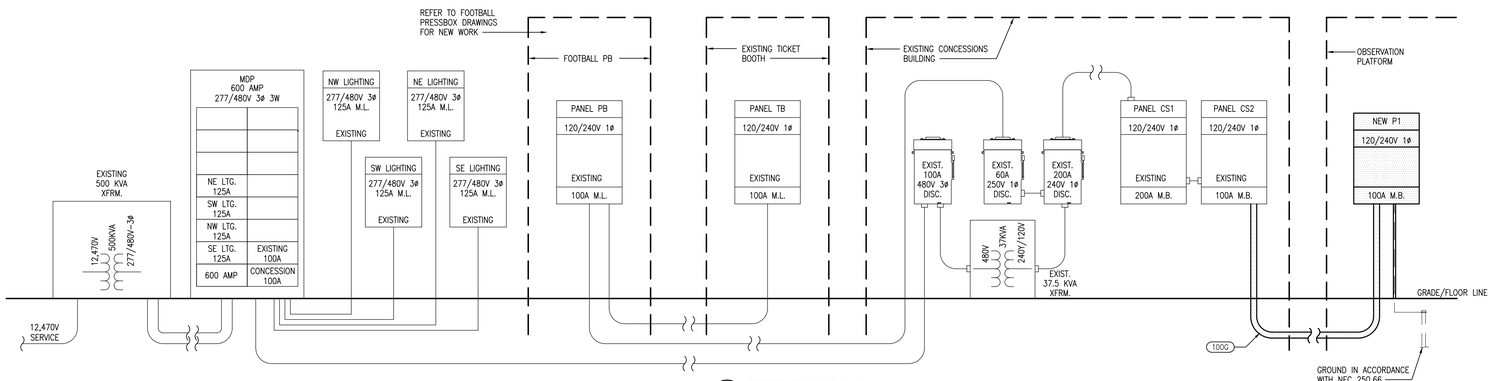


5 E-101 **RISER DIAGRAM**
SCALE: NONE

## SYMBOLS LEGEND

- P1(#) POWER CIRCUIT (#) FED FROM PANEL "P-1"; 120/208V-3PH-4W
- DUPLEX RECEPTACLE
- WP DUPLEX RECEPTACLE, GROUND FAULT CIRCUIT INTERRUPTER GFI RECEPTACLE WITH WEATHERPROOF COVER PLATE
- EXIT EXIT/UNIT COMBO: WALL-MOUNTED; ARROW AS SHOWN
- REMOTE EMERGENCY EGRESS LIGHT: WALL-MOUNTED. EXTEND 6VOLT DC CURRENT FROM HIGH OUTPUT EXIT/UNIT COMBO VIA 2-#10 CONDUCTORS IN 1/2" CONDUIT
- SURFACE-MOUNTED LIGHT FIXTURE; REFER TO FIXTURE SCHEDULE
- $ WALL SWITCH; SINGLE POLE 3 - 3-WAY
- 100G FEEDER, SEE CONDUIT AND WIRE SCHEDULE

## GENERAL ELECTRICAL NOTES

1. ELECTRICAL WORK SHALL COMPLY WITH THE REQUIREMENTS OF CHAPTER 27 OBC, THE NATIONAL ELECTRIC CODE (NEC), AND NFPA STANDARD 70, OBC APPROVED EDITION
2. ELECTRICAL CONDUCTORS SHALL BE MINIMUM 12 GAUGE COPPER RUN IN MINIMUM 1/2" DIAMETER EMT GALVANIZED CONDUIT, UNLESS NOTED OTHERWISE.
   a. RACEWAYS AND FITTINGS 42" AFF AND BELOW SHALL BE RIGID STEEL.
   b. RACEWAYS AND FITTINGS 42" AFF AND ABOVE SHALL BE EMT.
3. REFER TO N.E.C. ARTICLE 210-19, FOR MIN. AMPACITY AND SIZE. VOLTAGE DROP SHALL NOT EXCEED 3%, E.C. TO VERIFY
4. REFER TO N.E.C. ARTICLE 310-15, NOTE #8 TO TABLES, FOR AMPACITY ADJUSTMENT FACTORS.
5. RACEWAYS AND BOXES SHALL BE INSTALLED CONCEALED IN WALLS, FLOORS AND CEILINGS, UNLESS SPECIFICALLY NOTED OTHERWISE.
6. GROUND ELECTRICAL EQUIPMENT IN ACCORDANCE WITH ARTICLE 250 OF THE NATIONAL ELECTRICAL CODE
7. BALANCE EXISTING AND NEW PANELS IN ACCORDANCE WITH NEC
8. PROVIDE ALL OPENINGS, HOLES, CONNECTORS, ETC. AS NECESSARY TO CONNECT AND PROVIDE ACCESS FOR ELECTRICAL WORK IN PANELS, BOXES, ETC.
9. BATTERY PACK EXIT AND EGRESS LIGHTS SHALL BE ON THE SAME BRANCH CIRCUIT AS THAT SERVING THE NORMAL LIGHTING IN THE AREAS WHERE EACH LIGHT IS LOCATED AND SHALL BE CONNECTED AHEAD OF LOCAL SWITCHES, IN ACCORDANCE WITH OBC AND NEC

## GROUNDING NOTES

1. GROUNDING CABLE SHALL BE LAID SLACK A MINIMUM OF 18" BELOW FINISHED GRADE
2. GROUND RODS SHALL BE LOCATED A MINIMUM OF 10'-0" AWAY FROM BUILDING. GROUND BUS FROM BUILDING TO GROUND ROD SHALL BE INSTALLED IN SCHEDULE 80 PVC CONDUIT.
3. GROUND RESISTANCE SHALL BE 3 OHMS MAXIMUM. ADDITIONAL RODS OR ROD EXTENSIONS SHALL BE DRIVEN TO OBTAIN THIS VALUE BY TEST.
4. GROUND CABLE SHALL BE STRANDED SOFT, BARE COPPER CABLE, SIZED IN ACCORDANCE WITH NEC.
5. CONNECTIONS TO BE MADE BY THE THERMOLD PROCESS OF BURNDY OR CADWELD PROCESS OF ERICO PRODUCTS, INC.
6. BOND FOOTING REBAR PER NEC.
7. METAL ROOFING AND SIDING TO BE BONDED AND GROUNDED IN ACCORDANCE WITH NEC.

## KEYNOTE LEGEND

1. PROVIDE AUDIO CONNECTION, VERIFY REQUIREMENTS WITH AUDIO EQUIPMENT
2. PHOTOELECTRIC CELL; NEMA 3R INSTALLATION. CONTROLS EXTERIOR LIGHTING. PROVIDE WITH REQUIRED RELAY AND MOUNT ABOVE EXTERIOR LIGHT MOUNTING HEIGHT

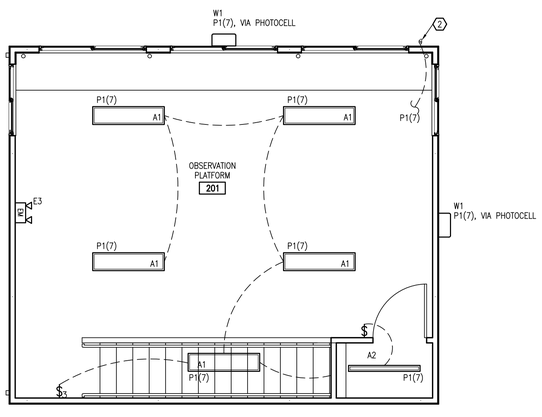


4 E-101 **SECOND FLOOR LIGHTING PLAN**
SCALE: 1/4"=1'-0"

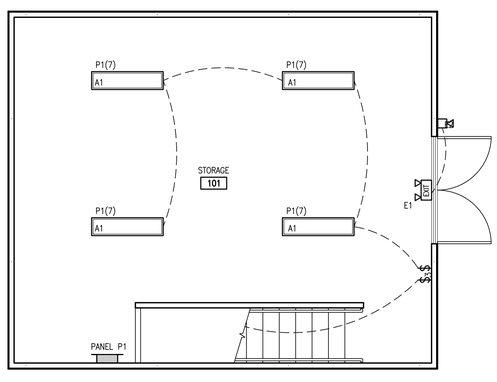


3 E-101 **FIRST FLOOR LIGHTING PLAN**
SCALE: 1/4"=1'-0"

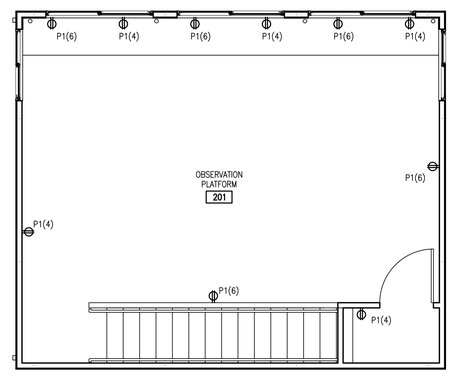


2 E-101 **SECOND FLOOR POWER PLAN**
SCALE: 1/4"=1'-0"

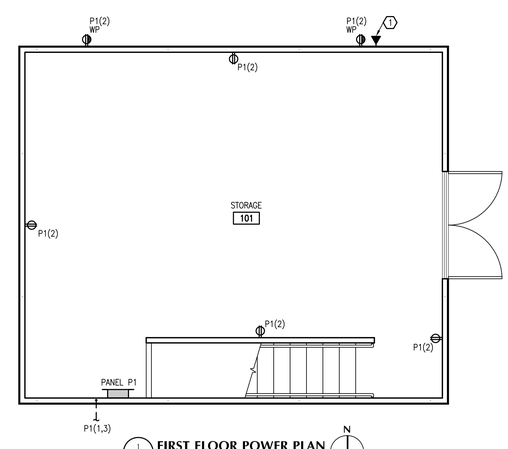


1 E-101 **FIRST FLOOR POWER PLAN**
SCALE: 1/4"=1'-0"

701-1/2 WEST FIRST STREET • DEFIANCE • OHIO • 43512 • PHONE • 419•782•6211 • architects@beilharzinc.com

STATE OF OHIO
KRAIG A. BEILHARZ
9482
REGISTERED ARCHITECT

KRAIG A. BEILHARZ, LICENSE #9482
EXPIRATION DATE: 12/31/2021

BEILHARZ ARCHITECTS INCORPORATED

PLOT SCALE
1/4"=1'-0"
0 2' 4' 6'
FOR SHEET SIZE 24"x36"

ISSUE DATE

| | |
|---|---|
| 1 | 01-08-20 OWNER REVIEW |
| 2 | 01-22-20 FOR PERMITS/BIDS |

© 2020 BEILHARZ ARCHITECTS, INC.
THE CONTENT OF THIS DRAWING IS NOT INTENDED TO BE SUITABLE FOR USE OR REUSE BY INDIVIDUALS, COMPANIES, CORPORATIONS, OR OTHER ENTITIES FOR ANY PURPOSE OTHER THAN THE INTENDED PURPOSE OF THIS DOCUMENT, NOR FOR USE ON ANY OTHER PROJECT. ANY REUSE OR REPRODUCTION WITHOUT WRITTEN VERIFICATION AND ADAPTATION BY THE ARCHITECT FOR THE SPECIFIC PURPOSE INTENDED SHALL BE AT THE USER'S SOLE RISK AND WITHOUT LIABILITY OR LEGAL EXPOSURE TO THE ARCHITECT

# PAULDING E.V. SCHOOLS

SOFTBALL FIELD OBSERVATION PLATFORM
755 NORTH WATER STREET
PAULDING, OHIO 45879

ELECTRCIAL PLANS

PROJECT: B9-4650 OP
DRAWN BY: SLB
CHECKED BY: KAB

SHEET
**E-101**