CITY OF OREGON OHIO
5330 SEAMAN ROAD
OREGON, OHIO 43616
www.oregonohio.org

March 24, 2022

ADDENDUM No. 1
LUC-2-22.51 NAVARRE / COY INTERSECTION IMPROVEMENT
PID 109596

CITY OF OREGON
DEPARTMENT OF PUBLIC SERVICE

BIDS TO BE OPENED: Thursday, March 31, 2022at **2:00 PM**

Plan holders of the City of Oregon's LUC-2-22.51 NAVARRE / COY INTERSECTION Improvement are hereby notified of the following amendments to the Contract Documents. The following additions, alterations, deletions and/or clarifications shall be part of the bid specifications as much as if they were originally included in the Contract Documents. This Addendum No. 1 is hereby made a part of the Contract Documents.

Notice to Bidders – Revised Bid Opening Date

The Bid Opening has been moved back to **2:00 pm** on **Thursday, March 31, 2022**.

Delete and Replace the text for paragraph 1 of the **Notice to Bidders** with the following revised bid opening time:

Sealed proposals marked for "**LUC-2-22.51 NAVARRE / COY INTERSECTION IMPROVEMENT (PID 109596)**" will be received by the City of Oregon, Ohio, at the Office of the Director of Public Service at the Oregon Municipal Building, 5330 Seaman Road, Oregon, Ohio 43616-2608, **until 2:00 pm, local time, on Thursday, March 31, 2022**, and then opened and read aloud.

CONTRACT CHANGES

1) **PROJECT BID FORM**

Replace PAGES 15 - 28 in the Project Bid Book with the attached **BID PROPOSAL FORMS (REVISED) – Addendum #1 (Issued 3/24/22).**

2) **Project Estimated Cost – Revised**

All references in the bid specifications of the base bid estimated cost of construction is hereby adjusted from $2,340,000.00 to **$2,695,000.00**.

3) **PLAN REVISIONS**

Replace PLAN SHEETS 28, 29, 34, 35, 85, 102, and103 in the Plan Set with the attached **REVISED PLAN SHEETS 28, 29, 34, 35, 85, 102, and103 noted "Addendum #1 (Issued 3/24/22)".**

ANSWERS TO SUBMITTED QUESTIONS

Question #1 - On sheet 106 (Elevation C-C) shows backfilling of the 12' X 6' with 57's to the springline and 304's over the top, is this for the entire length on the box? Also, I cannot find a detail for any stone under the box, is this correct?

Yes, the Elevation C-C Detail on Sheet 106 applies for the entire length of the culvert. Bedding stone will be required under the Type A conduit as required per the installation plan to be prepared by the contractor per 611 specifications.

CITY OF OREGON OHIO
5330 SEAMAN ROAD
OREGON, OHIO 43616
www.oregonohio.org

Question #2 - There is an 8" sanitary and 8" waterline to be encased in 1.5' x 2' of concrete. These are called out on sheets 59/118 and 102/118. Where are these items to be paid under?

See note on revised sheet 103.

Question #3 - Are existing plans available for the structure on Coy Road over Amolsch Ditch?

Plans for the existing culvert are available through the Public Service Department. Please send email request to Deputy City Engineer Rodney Shultz at rshultz@oregonohio.org.

*** * * END OF ADDENDUM NO. 1 * * ***

Rodney Shultz, P.E
Deputy City Engineer

BID FORM

To the Director of Public Service
Municipal Building
5330 Seaman Road
Oregon, Ohio 43616-2633

I. The undersigned, having familiarized _____ with the local conditions affecting the cost of the work and with the Contract Documents, hereby proposes to perform everything required to be performed and to provide and furnish all of the labor, materials, necessary tools, expendable equipment, and all utility and transportation services necessary to perform and complete in a workmanlike manner all of the work required for the construction of a median and resurfacing 0.20 miles of Navarre Avenue and widening and resurfacing 0.16 miles of Coy Road along with the replacement of the existing culvert on Coy Road north of Navarre Avenue. Work also includes the replacement of the traffic signal, pedestrian ramps, pavement marking and signing, drainage improvements and miscellaneous work required to complete the project for the CITY OF OREGON, OHIO, all in accordance with the specifications for the following prices, to wit:

Project Bid: **LUC-2-22.51 Navarre / Coy Intersection Improvement (PID 109596)**

REF. NO.	ODOT ITEM#	ITEM DESCRIPTION	QTY	UNIT	PRICE BID	AMOUNT BID
		ROADWAY				
1	201	CLEARING AND GRUBBING	1	LS		
2	202	PAVEMENT REMOVED	2,734	SY		
3	202	WALK REMOVED	2,385	SF		
4	202	CURB REMOVED	393	FT		
5	202	CURB AND GUTTER REMOVED	1,737	FT		
6	202	PIPE REMOVED, 24" AND UNDER	466	FT		
7	202	PIPE REMOVED, OVER 24"	31	FT		
8	202	GUARDRAIL REMOVED	251	FT		

REF. NO.	ODOT ITEM#	ITEM DESCRIPTION	QTY	UNIT	PRICE BID	AMOUNT BID
9	202	GUARD POST REMOVED	2	EACH		
10	202	MANHOLE REMOVED	1	EACH		
11	202	CATCH BASIN REMOVED	16	EACH		
12	202	REMOVAL MISC.: PRIVATE SIGN	1	EACH		
13	203	EXCAVATION	2,739	CY		
14	203	EMBANKMENT	500	CY		
15	204	SUBGRADE COMPACTION	5,426	SY		
16	204	EXCAVATION OF SUBGRADE	1,091	CY		
17	204	GRANULAR MATERIAL, TYPE C	1,091	CY		
18	204	PROOF ROLLING	2	HOUR		
19	204	GEOTEXTILE FABRIC	3,272	SY		
20	204	GEOGRID	3,272	SY		
21	606	GUARDRAIL, TYPE MGS WITH LONG POSTS	113	FT		
22	606	ANCHOR ASSEMBLY, TYPE T	2	EACH		
23	608	4" CONCRETE WALK	2,503	SF		
24	608	6" CONCRETE WALK	440	SF		
25	608	6" CONCRETE WALK, AS PER PLAN	1,261	SF		
26	608	CURB RAMP, AS PER PLAN	1,030	SF		
27	623	MONUMENT BOX ADJUSTED TO GRADE	1	EACH		
28	625	LIGHT POLE REMOVED	2	EACH		

REF. NO.	ODOT ITEM#	ITEM DESCRIPTION	QTY	UNIT	PRICE BID	AMOUNT BID
		EROSION CONTROL				
29	659	SOIL ANALYSIS TEST	2	EACH		
30	659	TOPSOIL	379	CY		
31	659	SEEDING AND MULCHING	3,404	SY		
32	659	REPAIR SEEDING AND MULCHING	170	SY		
33	659	INTER-SEEDING	170	SY		
34	659	COMMERCIAL FERTILIZER	0.47	TON		
35	659	LIME	0.7	ACRE		
36	659	WATER	19	MGAL		
37	659	MOWING	8	MSF		
38	SPEC	WORK INVOLVING REGULATED WATER	500	GAL		
39	SPEC	8" COMPOST FILTER SOCK FOR INLET PROTECTION	224	FT		
40	832	STORM WATER POLLUTION PREVENTION PLAN***, AS PER PLAN***	1	LS		
41	832	EROSION CONTROL	23,128	EACH	**$1.00**	**$23,128.00**
		DRAINAGE				
42	605	6" UNCLASSIFIED PIPE UNDERDRAINS	162	FT		
43	605	6" BASE PIPE UNDERDRAINS	1,740	FT		
44	611	6" CONDUIT, TYPE F FOR UNDERDRAIN OUTLETS	322	FT		
45	611	6" CONDUIT, TYPE B	65	FT		
46	611	6" CONDUIT, TYPE E	30	FT		

REF. NO.	ODOT ITEM#	ITEM DESCRIPTION	QTY	UNIT	PRICE BID	AMOUNT BID
47	611	8" CONDUIT, TYPE B, AS PER PLAN	15	FT		
48	611	10" CONDUIT, TYPE B, AS PER PLAN	12	FT		
49	611	12" CONDUIT, TYPE B, AS PER PLAN	136	FT		
50	611	12" CONDUIT, TYPE C, AS PER PLAN	67	FT		
51	611	15" CONDUIT, TYPE B, FOR SANITARY	30	FT		
52	611	15" CONDUIT, TYPE C, FOR SANITARY	30	FT		
53	611	15" CONDUIT, TYPE C, AS PER PLAN	205	FT		
54	611	18" CONDUIT, TYPE B, AS PER PLAN	29	FT		
55	611	21" CONDUIT, TYPE B, AS PER PLAN	5	FT		
56	611	27" CONDUIT, TYPE B, AS PER PLAN	11	FT		
57	611	24" X 38" CONDUIT, TYPE A, 706.04, AS PER PLAN	10	FT		
58	611	34" X 53" CONDUIT, TYPE B, 706.04, AS PER PLAN	4	FT		
59	611	CATCH BASIN, NO. 3	6	EACH		
60	611	CATCH BASIN, NO. 7	2	EACH		
61	611	CATCH BASIN, NO. 2-2B	4	EACH		
62	611	CATCH BASIN ADJUSTED TO GRADE	2	EACH		
63	611	MANHOLE, NO. 3	7	EACH		
64	611	MANHOLE ADJUSTED TO GRADE	23	EACH		
65	SPEC	GAS VALVE BOX ADJUSTED TO GRADE	2	EACH		
66	SPEC	MISCELLANEOUS METAL	600	LB		

REF. NO.	ODOT ITEM#	ITEM DESCRIPTION	QTY	UNIT	PRICE BID	AMOUNT BID
		PAVEMENT				
67	254	PAVEMENT PLANING, ASPHALT CONCRETE, 3 1/4"	8,957	SY		
68	301	ASPHALT CONCRETE BASE, PG64-22	556	CY		
69	304	AGGREGATE BASE	849	CY		
70	407	TACK COAT	91	GAL		
71	407	NON-TRACKING TACK COAT	1,517	GAL		
72	441	ASPHALT CONCRETE SURFACE COURSE, TYPE 1, (448), PG64-22	66	CY		
73	441	ASPHALT CONCRETE INTERMEDIATE COURSE, TYPE 2, (448)	93	CY		
74	441	ASPHALT CONCRETE SURFACE COURSE, TYPE 1, (448), (DRIVEWAYS)	8	CY		
75	441	ASPHALT CONCRETE INTERMEDIATE COURSE, TYPE 2, (448), (DRIVEWAYS)	3	CY		
76	442	ASPHALT CONCRETE SURFACE COURSE, 12.5 MM, TYPE A -448	453	CY		
77	442	ASPHALT CONCRETE INTERMEDIATE COURSE, 19 MM, TYPE A (448)	538	CY		
78	451	6" REINFORCED CONCRETE PAVEMENT, CLASS QC 1P, AS PER PLAN, DECORATIVE CONCRETE	72	SY		
79	452	6" NON-REINFORCED CONCRETE PAVEMENT, CLASS QC MS	19	SY		
80	452	8" NON-REINFORCED CONCRETE PAVEMENT, CLASS QC MS	519	SY		
81	609	COMBINATION CURB AND GUTTER, TYPE 2, AS PER PLAN	1,846	FT		
82	609	CURB, TYPE 3-B, AS PER PLAN	78	FT		
83	609	CURB, TYPE 6	193	FT		
84	609	8" CONCRETE TRAFFIC ISLAND, AS PER PLAN, TRUCK APRON	68	SY		
85	609	9" CONCRETE TRAFFIC ISLAND	451	***SY***		

REF. NO.	ODOT ITEM#	ITEM DESCRIPTION	QTY	UNIT	PRICE BID	AMOUNT BID
		WATER WORK				
86	638	FIRE HYDRANT AND GATE VALVE REMOVED AND RESET	2	EACH		
87	638	VALVE BOX ADJUSTED TO GRADE	1	EACH		
88	638	SERVICE BOX ADJUSTED TO GRADE	2	EACH		
		TRAFFIC CONTROL				
89	625	GROUND ROD, AS PER PLAN	4	EACH		
90	630	GROUND MOUNTED SUPPORT, NO. 3 POST	319	FT		
91	630	STREET NAME SIGN SUPPORT, AS PER PLAN	1	EACH		
92	630	SIGN POST REFLECTOR	14	EACH		
93	630	OVERHEAD SIGN SUPPORT, TYPE TC-16.22, DESIGN 9	1	EACH		
94	630	OVERHEAD SIGN SUPPORT, TYPE TC-16.22, DESIGN 12	2	EACH		
95	630	OVERHEAD SIGN SUPPORT, TYPE TC-16.22, DESIGN 13	1	EACH		
96	630	SIGN SUPPORT ASSEMBLY, POLE MOUNTED	9	EACH		
97	630	SIGN, FLAT SHEET	294	SF		
98	630	RIGID OVERHEAD SIGN SUPPORT FOUNDATION	4	EACH		
99	630	REMOVAL OF GROUND MOUNTED SIGN AND STORAGE	24	EACH		
100	630	REMOVAL OF GROUND MOUNTED POST SUPPORT AND DISPOSAL	26	EACH		
101	630	REMOVAL OF OVERHEAD MOUNTED SIGN AND STORAGE	4	EACH		
102	630	REMOVAL OF POLE MOUNTED SIGN AND DISPOSAL	6	EACH		
103	630	REMOVAL OF OVERHEAD SIGN SUPPORT AND STORAGE, TYPE TC-16.22	2	EACH		

REF. NO.	ODOT ITEM#	ITEM DESCRIPTION	QTY	UNIT	PRICE BID	AMOUNT BID
104	630	SIGNING, MISC.: REMOVE AND RELOCATE COMMERCIAL SIGNS	2	EACH		
105	632	SIGNAL SUPPORT, MECHANICAL DAMPER FOR TC-81.22 MAST ARM (GREATER THAN 39' IN LENGTH), AS PER PLAN	3	EACH		
106	644	EDGE LINE, 4"	0.3	MILE		
107	644	LANE LINE, 4"	0.4	MILE		
108	644	CENTER LINE	0.21	MILE		
109	644	CHANNELIZING LINE, 8"	1,485	FT		
110	644	STOP LINE	160	FT		
111	644	CROSSWALK LINE, 24", AS PER PLAN	344	FT		
112	644	TRANSVERSE/DIAGONAL LINE	158	FT		
113	644	PARKING LOT STALL MARKING	205	FT		
114	644	LANE ARROW	27	EACH		
115	644	DOTTED LINE, 4"	763	FT		
116	644	YIELD LINE	34	FT		
		TRAFFIC SIGNALS				
117	611	4" CONDUIT, TYPE E	100	FT		
118	625	BRACKET ARM, 15', AS PER PLAN	4	EACH		
119	625	NO. 2 AWG 2400 VOLT DISTRIBUTION CABLE	888	FT		
120	625	NO. 10 AWG POLE AND BRACKET CABLE	204	FT		
121	625	CONDUIT, 2", 725.04	25	FT		
122	625	CONDUIT, 2", 725.05, AS PER PLAN	25	FT		

REF. NO.	ODOT ITEM#	ITEM DESCRIPTION	QTY	UNIT	PRICE BID	AMOUNT BID
123	625	CONDUIT, 3", 725.04	25	FT		
124	625	CONDUIT, 3", 725.05, AS PER PLAN	840	FT		
125	625	CONDUIT, 4", 725.05, AS PER PLAN	179	FT		
126	625	CONDUIT, 4", 725.04	48	FT		
127	625	CONDUIT, JACKED OR DRILLED, 725.04, 3"	25	FT		
128	625	CONDUIT, JACKED OR DRILLED, 725.04, 4"	557	FT		
129	625	LUMINAIRE, CONVENTIONAL, AS PER PLAN, 80 WATT LED, 120 VOLTS	4	EACH		
130	625	TRENCH, AS PER PLAN	987	FT		
131	625	TRENCH IN PAVED AREA	50	FT		
132	625	PULL BOX, 725.08, 18", AS PER PLAN	13	EACH		
133	625	PULL BOX, 725.08, 24", AS PER PLAN	7	EACH		
134	625	GROUND ROD, AS PER PLAN	9	EACH		
135	625	POWER SERVICE, AS PER PLAN	1	EACH		
136	625	UNDERGROUND WARNING/MARKING TAPE, AS PER PLAN	1,197	FT		
137	632	VEHICULAR SIGNAL HEAD, (LED), 3-SECTION, 12" LENS, 1-WAY, POLYCARBONATE, AS PER PLAN	***10***	EACH		
138	632	VEHICULAR SIGNAL HEAD, (LED), 5-SECTION, 12" LENS, 1-WAY, POLYCARBONATE, AS PER PLAN	4	EACH		
139	632	PEDESTRIAN SIGNAL HEAD (LED), TYPE D2, AS PER PLAN	9	EACH		
140	632	COVERING OF VEHICULAR SIGNAL HEAD	***14***	EACH		
141	632	COVERING OF PEDESTRIAN SIGNAL HEAD	9	EACH		

REF. NO.	ODOT ITEM#	ITEM DESCRIPTION	QTY	UNIT	PRICE BID	AMOUNT BID
142	632	PEDESTRIAN PUSHBUTTON, AS PER PLAN	9	EACH		
143	632	SIGNAL CABLE, 2 CONDUCTOR, NO. 14 AWG, AS PER PLAN	1,744	FT		
144	632	SIGNAL CABLE, 5 CONDUCTOR, NO. 14 AWG, AS PER PLAN	3,754	FT		
145	632	SIGNAL CABLE, 7 CONDUCTOR, NO. 14 AWG, AS PER PLAN	1,571	FT		
146	632	SIGNAL SUPPORT FOUNDATION, AS PER PLAN	4	EACH		
147	632	PEDESTAL FOUNDATION, AS PER PLAN	5	EACH		
148	632	SERVICE CABLE, MISC.: 3 CONDUCTOR, NO. 2 AWG	30	FT		
149	632	POWER CABLE, 2 CONDUCTOR, NO. 4 AWG, AS PER PLAN	502	FT		
150	632	SIGNAL SUPPORT, MECHANICAL DAMPER FOR TC-81.22 MAST ARM (GREATER THAN 39' IN LENGTH), AS PER PLAN	4	EACH		
151	632	COMBINATION SIGNAL SUPPORT, TYPE TC-81.22, DESIGN 12, AS PER PLAN	2	EACH		
152	632	COMBINATION SIGNAL SUPPORT, TYPE TC-81.22, DESIGN 13, AS PER PLAN	2	EACH		
153	632	PEDESTAL, 8', AS PER PLAN 80	1	EACH		
154	632	PEDESTAL, MISC.:PEDESTAL, 15'. TRANSFORMER BASE, AS PER PLAN	4	EACH		
155	632	REMOVAL OF TRAFFIC SIGNAL INSTALLATION, AS PER PLAN	1	EACH		
156	632	SIGNALIZATION, MISC.: LED, NO RIGHT TURN SIGN, SYMBOL TYPE	2	EACH		
157	632	SIGNALIZATION, MISC.: ILLUMINATED SIGN WIRING	1,048	FT		
158	632	SIGNALIZATION, MISC.: OUTLET RECEPTACLE WIRING	1,048	FT		
159	633	CONTROLLER ITEM, MISC.: CONTROLLER UNIT, TYPE TS2/A2, WITH CABINET, TYPE TS2	1	EACH		
160	633	CABINET FOUNDATION	1	EACH		

REF. NO.	ODOT ITEM#	ITEM DESCRIPTION	QTY	UNIT	PRICE BID	AMOUNT BID
161	633	CONTROLLER WORK PAD, AS PER PLAN 82	1	EACH		
162	633	UNINTERRUPTIBLE POWER SUPPLY (UPS), 1000 WATT, AS PER PLAN	1	EACH		
163	815	SPREAD SPECTRUM RADIO, AS PER PLAN 81	1	EACH		
164	816	VIDEO DETECTION SYSTEM, AS PER PLAN	1	EACH		
		LANDSCAPING				
165	203	ROADWAY, MISC.: SOIL MIX A	30	CY		
166	203	ROADWAY, MISC.: SOIL MIX B	35	CY		
167	203	ROADWAY, MISC.: DRAINAGE FILL	70	SY		
168	602	MASONRY, MISC.: DECORATIVE COLUMN	2	EACH		
169	625	CONNECTION, FUSED PULL APART	34	EACH		
170	625	LIGHT POLE, MISC.: REMOVE AND RE-ERECT EXISTING PARKING LOT LIGHTING ***SYSTEM***	1	EACH		
171	625	LIGHT POLE, MISC.:DECORATIVE, 1 MAST ARM	2	EACH		
172	625	LIGHT POLE, MISC.:DECORATIVE, 2 MAST ARM	***2***	EACH		
173	625	LIGHT POLE, MISC.: LIGHTED BOLLARD	***30***	EACH		
174	625	LIGHT POLE, MISC.: LIGHTED BOLLARD REPLACEMENT	2	EACH		
175	625	LIGHT POLE FOUNDATION, 24" X 6' DEEP	4	EACH		
176	625	NO. 4 AWG 2400 VOLT DISTRIBUTION CABLE	4,683	FT		
177	625	NO. 10 AWG POLE AND BRACKET CABLE	3,983	FT		
178	625	DISTRIBUTION CABLE, MISC.:5/C FOR BOLLARD OPERATION	600	FT		
179	625	DISTRIBUTION CABLE, MISC.:5/C FOR BOLLARD COMMUNICATION	144	FT		

REF. NO.	ODOT ITEM#	ITEM DESCRIPTION	QTY	UNIT	PRICE BID	AMOUNT BID
180	625	CONDUIT, 1", 725.04	556	FT		
181	625	CONDUIT, 3", 725.04	1,198	FT		
182	625	CONDUIT, JACKED OR DRILLED, 725.04, 3"	83	FT		
183	625	TRENCH IN PAVED AREA	606	FT		
184	625	TRENCH, 24" DEEP	1,133	FT		
185	625	PULL BOX, 725.08, 18"	5	EACH		
186	625	PULL BOX, MISC.:725.06, 13" X 24", AS PER PLAN	2	EACH		
187	625	PULL BOX, MISC.:725.06, 24" X 36", AS PER PLAN	3	EACH		
188	625	GROUND ROD, AS PER PLAN	5	EACH		
189	625	UNDERGROUND WARNING/MARKING TAPE	1,779	FT		
190	625	LIGHTING, MISC.: BOLLARD LIGHTING PROGRAMMING SYSTEM	1	EACH		
191	632	POWER CABLE, 3 CONDUCTOR, NO. 8 AWG, AS PER PLAN	896	FT		
192	661	MULCH, AS PER PLAN	5	CY		
		STRUCTURE OVER 20 FOOT SPAN (CTY-RTE-SECT or SFN)				
193	202	STRUCTURE REMOVED, AS PER PLAN	1	LS		
194	503	COFFERDAMS AND EXCAVATION BRACING	1	LS		
195	503	UNCLASSIFIED EXCAVATION	830	CY		
196	509	EPOXY COATED REINFORCING STEEL	3,944	LB		
197	511	CLASS QC1 CONCRETE, RETAINING/WINGWALL NOT INCLUDING FOOTING	16	CY		
198	511	CLASS QC1 CONCRETE, FOOTING	29	CY		

REF. NO.	ODOT ITEM#	ITEM DESCRIPTION	QTY	UNIT	PRICE BID	AMOUNT BID
199	511	CLASS QC1 CONCRETE, HEADWALL	1	CY		
200	512	SEALING OF CONCRETE SURFACES (EPOXY-URETHANE)	40	SY		
201	512	TYPE 2 WATERPROOFING	450	SY		
202	512	TYPE 3 WATERPROOFING	430	SY		
203	516	1" PREFORMED EXPANSION JOINT FILLER	20	SF		
204	518	POROUS BACKFILL WITH GEOTEXTILE FABRIC	1	LS		
205	601	ROCK CHANNEL PROTECTION, TYPE B WITH FILTER	95	CY		
206	611	12' X 6' CONDUIT, TYPE A, 706.05, AS PER PLAN	242	FT		
		MAINTENANCE OF TRAFFIC				
207	614	LAW ENFORCEMENT OFFICER WITH PATROL CAR FOR ASSISTANCE	32	HOUR		
208	614	PORTABLE CHANGEABLE MESSAGE SIGN, AS PER PLAN	18	SNMT		
209	614	WORK ZONE LANE LINE, CLASS I, 4", 4"	0.25	MILE		
210	614	WORK ZONE CENTER LINE, CLASS I (SOLID, DOUBLE, YELLOW)	0.24	MILE		
211	614	WORK ZONE EDGE LINE, CLASS I, 4", 4" (WHITE)	0.43	MILE		
212	614	WORK ZONE CHANNELIZING LINE, CLASS I, 8", 8"	1,129	FT		
213	614	WORK ZONE DOTTED LINE, CLASS I	100	FT		
214	614	WORK ZONE STOP LINE, CLASS I	107	FT		
215	614	WORK ZONE CROSSWALK LINE, CLASS I	741	FT		
216	615	PAVEMENT FOR MAINTAINING TRAFFIC, CLASS A, AS PER PLAN, 3"	976	SY		
217	616	WATER	6.4	MGAL		

REF. NO.	ODOT ITEM#	ITEM DESCRIPTION	QTY	UNIT	PRICE BID	AMOUNT BID
		INCIDENTALS				
218	614	MAINTAINING TRAFFIC	1	LS		
219	619	FIELD OFFICE, TYPE B	7	MNTH		
220	623	CONSTRUCTION LAYOUT STAKES AND SURVEYING	1	LS		
221	624	MOBILIZATION	1	LS		

The cost for any additional items required to complete the project per the specifications not specifically listed shall be included in the cost of the pertinent item.

TOTAL PROJECT BASE BID IN FIGURES $ _____

(Unofficial total subject to correction)

Bidder, on the following blanks, must provide an alternate price for the amount to be added to (or deducted from) the Base Bid Item for the alternate bid item equipment or material as specified in the plans and specifications. These prices may be considered in the award of the Contract. The Contract will be awarded on the basis of the base bid and alternate bid items.

ALTERNATE BID - LUC-2-22.51 Navarre / Coy Intersection Improvement (PID 109596)

REF. NO.	ODOT ITEM#	ITEM DESCRIPTION	QTY	UNIT	PRICE BID	AMOUNT BID
		PAVEMENT ALTERNATES				
A-85	609	**ADDITION TO BASE BID NO. 85:** MEDIAN, MISC.: 9" CONCRETE MEDIAN, DECORATIVE	451	SY		
		TRAFFIC SIGNALS ALTERNATES				
A-129	625	**ADDITION TO BASE BID NO. 129:** LUMINAIRE, CONVENTIONAL, SOLID STATE (LED), DECORATIVE	4	EACH		

REF. NO.	ODOT ITEM#	ITEM DESCRIPTION	QTY	UNIT	PRICE BID	AMOUNT BID
A-137	632	**ADDITION TO BASE BID NO. 137:** VEHICULAR SIGNAL HEAD, MISC.:VEHICULAR SIGNAL HEAD, LED, 3-SECTION, WITH BACKPLATE, AS PER PLAN	11	EACH		
A-138	632	**ADDITION TO BASE BID NO. 138:** VEHICULAR SIGNAL HEAD, MISC.:VEHICULAR SIGNAL HEAD, LED, 5-SECTION, WITH BACKPLATE, AS PER PLAN	4	EACH		
A-142	632	**ADDITION TO BASE BID NO. 142:** PEDESTRIAN PUSHBUTTON, AS PER PLAN	9	EACH		
A-151	632	**ADDITION TO BASE BID NO. 151:** COMBINATION SIGNAL SUPPORT, MISC.:COMBINATION SIGNAL SUPPORT, TYPE TC-81.22, DESIGN 12, DECORATIVE, AS PER PLAN	3	EACH		
A-152	632	**ADDITION TO BASE BID NO. 152:** COMBINATION SIGNAL SUPPORT, MISC.:COMBINATION SIGNAL SUPPORT, TYPE TC-81.22, DESIGN 13, DECORATIVE, AS PER PLAN	1	EACH		
A-162	633	**ADDITION TO BASE BID NO. 162:** UNINTERRUPTIBLE POWER SUPPLY (UPS), 1000 WATT, AS PER PLAN	1	EACH		

TOTAL ALTERNATE BID IN FIGURES $ _____

(Unofficial total subject to correction)

II. Time of Completion. The undersigned agrees to substantially complete the work covered by the contract by October 28, 2022 and completed and ready for final payment by November 30, 2022.

SHEET NUM.										PART.		ITEM	ITEM EXT	GRAND TOTAL	UNIT	DESCRIPTION	SEE SHEET NO.
		10	34	35	36	38	39	70	73	01/SAF/OT	02/NFP/OT						
																DRAINAGE (CONT.)	
					4					4		611	52903	4	FT	34" X 53" CONDUIT, TYPE B, 706.04, AS PER PLAN	8
					6					6		611	98150	6	EACH	CATCH BASIN, NO. 3	
					2					2		611	98390	2	EACH	CATCH BASIN, NO. 7	
					4					4		611	98470	4	EACH	CATCH BASIN, NO. 2-2B	
					2					2		611	98630	2	EACH	CATCH BASIN ADJUSTED TO GRADE	
					7					7		611	99574	7	EACH	MANHOLE, NO. 3	
			15	2	6					23		611	99654	23	EACH	MANHOLE ADJUSTED TO GRADE	
			2							2		SPECIAL	61199700	2	EACH	GAS VALVE BOX ADJUSTED TO GRADE	
		600								600		SPECIAL	61199820	600	LB	MISCELLANEOUS METAL	10
																PAVEMENT	
						160	8,797			8,957		254	01000	8,957	SY	PAVEMENT PLANING, ASPHALT CONCRETE, 3 1/4"	
							556			556		301	46000	556	CY	ASPHALT CONCRETE BASE, PG64-22	
						293	556			849		304	20000	849	CY	AGGREGATE BASE	
						91				91		407	10000	91	GAL	TACK COAT	
							1,517			1,517		407	20000	1,517	GAL	NON-TRACKING TACK COAT	
						66				66		441	50000	66	CY	ASPHALT CONCRETE SURFACE COURSE, TYPE 1, (448), PG64-22	
						93				93		441	50300	93	CY	ASPHALT CONCRETE INTERMEDIATE COURSE, TYPE 2, (448)	
						8				8		441	50400	8	CY	ASPHALT CONCRETE SURFACE COURSE, TYPE 1, (448), (DRIVEWAYS)	
						3				3		441	50600	3	CY	ASPHALT CONCRETE INTERMEDIATE COURSE, TYPE 2, (448), (DRIVEWAYS)	
							453			453		442	20000	453	CY	ASPHALT CONCRETE SURFACE COURSE, 12.5 MM, TYPE A (448)	
							538			538		442	20200	538	CY	ASPHALT CONCRETE INTERMEDIATE COURSE, 19 MM, TYPE A (448)	
						72				72		451	10011	72	SY	6" REINFORCED CONCRETE PAVEMENT, CLASS QC 1P, AS PER PLAN, DECORATIVE CONCRETE	10
						19				19		452	10050	19	SY	6" NON-REINFORCED CONCRETE PAVEMENT, CLASS QC MS	
						519				519		452	12050	519	SY	8" NON-REINFORCED CONCRETE PAVEMENT, CLASS QC MS	
			863	983						1,846		609	12001	1,846	FT	COMBINATION CURB AND GUTTER, TYPE 2, AS PER PLAN	8
			38	40						78		609	22001	78	FT	CURB, TYPE 3-B, AS PER PLAN	8
						193				193		609	26000	193	FT	CURB, TYPE 6	
			30	38						68		609	57001	68	SY	8" CONCRETE TRAFFIC ISLAND, AS PER PLAN, TRUCK APRON	10
			382	69						451		609	58000	451	SY	9" CONCRETE TRAFFIC ISLAND	
																WATER WORK	
			1	1						2		638	10600	2	EACH	FIRE HYDRANT AND GATE VALVE REMOVED AND RESET	
			1							1		638	10800	1	EACH	VALVE BOX ADJUSTED TO GRADE	
			2							2		638	10900	2	EACH	SERVICE BOX ADJUSTED TO GRADE	
																TRAFFIC CONTROL	
									4	4		625	32001	4	EACH	GROUND ROD, AS PER PLAN	69
									319	319		630	03100	319	FT	GROUND MOUNTED SUPPORT, NO. 3 POST	
									1	1		630	08501	1	EACH	STREET NAME SIGN SUPPORT, AS PER PLAN	69
									14	14		630	08600	14	EACH	SIGN POST REFLECTOR	
									1	1		630	11002	1	EACH	OVERHEAD SIGN SUPPORT, TYPE TC-16.21, DESIGN 10	
									2	2		630	11202	2	EACH	OVERHEAD SIGN SUPPORT, TYPE TC-16.21, DESIGN 12	
									1	1		630	11202	1	EACH	OVERHEAD SIGN SUPPORT, TYPE TC-16.21, DESIGN 12	
									9	9		630	79500	9	EACH	SIGN SUPPORT ASSEMBLY, POLE MOUNTED	
									294	294		630	80100	294	SF	SIGN, FLAT SHEET	
									4	4		630	84510	4	EACH	RIGID OVERHEAD SIGN SUPPORT FOUNDATION	
									24	24		630	85000	24	EACH	REMOVAL OF GROUND MOUNTED SIGN AND STORAGE	
									26	26		630	86002	26	EACH	REMOVAL OF GROUND MOUNTED POST SUPPORT AND DISPOSAL	
									4	4		630	87000	4	EACH	REMOVAL OF OVERHEAD MOUNTED SIGN AND STORAGE	
									6	6		630	87500	6	EACH	REMOVAL OF POLE MOUNTED SIGN AND DISPOSAL	
									2	2		630	88002	2	EACH	REMOVAL OF OVERHEAD SIGN SUPPORT AND STORAGE, TYPE TC-16.21	
									2	2		630	97700	2	EACH	SIGNING, MISC.: , REMOVE AND RELOCATE COMMERCIAL SIGNS	69
									3	3		632	77233	3	EACH	SIGNAL SUPPORT, MECHANICAL DAMPER FOR TC-81.21 MAST ARM (GREATER THAN 39' IN LENGTH), AS PER PLAN	80
								0.3		0.3		644	00100	0.3	MILE	EDGE LINE, 4"	
								0.4		0.4		644	00200	0.4	MILE	LANE LINE, 4"	
								0.21		0.21		644	00300	0.21	MILE	CENTER LINE	

CALCULATED SEA
CHECKED ALZ

Addendum #1 (Issued 3/24/22)

GENERAL SUMMARY

LUC-2-22.51

M:\9105 (City of Oregon - LUC-2-22.5)Navarre & Coy Safety Improvements)\09596_LUC-2-22.5\Design\Roadway\Sheets\09596_GG001.dgn Sheet 3/24/2022 9:59:36 AM ADC

SHEET NUM.									PART.		ITEM	ITEM EXT	GRAND TOTAL	UNIT	DESCRIPTION	SEE SHEET NO.
					70	78	85	86	01/SAF/OT	02/NFP/OT						
															TRAFFIC CONTROL (CONT.)	
					1,485				1,485		644	00400	1,485	FT	CHANNELIZING LINE, 8"	
					160				160		644	00500	160	FT	STOP LINE	
					344				344		644	00631	344	FT	CROSSWALK LINE, 24", AS PER PLAN	69
					158				158		644	00700	158	FT	TRANSVERSE/DIAGONAL LINE	
					205				205		644	01200	205	FT	PARKING LOT STALL MARKING	
					27				27		644	01300	27	EACH	LANE ARROW	
					763				763		644	01500	763	FT	DOTTED LINE, 4"	
					34				34		644	20800	34	FT	YIELD LINE	
															TRAFFIC SIGNALS	
						100			100		611	00400	100	FT	4" CONDUIT, TYPE E	
								4	4		625	18201	4	EACH	BRACKET ARM, 15', AS PER PLAN	79
								888	888		625	23300	888	FT	NO. 2 AWG 2400 VOLT DISTRIBUTION CABLE	
								204	204		625	23400	204	FT	NO. 10 AWG POLE AND BRACKET CABLE	
						25			25		625	25400	25	FT	CONDUIT, 2", 725.04	
						25			25		625	25403	25	FT	CONDUIT, 2", 725.05, AS PER PLAN	79
						25			25		625	25500	25	FT	CONDUIT, 3", 725.04	
						25	232	583	840		625	25503	840	FT	CONDUIT, 3", 725.05, AS PER PLAN	79
						25	20	3	48		625	25603	48	FT	CONDUIT, 4", 725.05, AS PER PLAN	79
							110	69	179		625	25600	179	FT	CONDUIT, 4", 725.04	
						25			25		625	25902	25	FT	CONDUIT, JACKED OR DRILLED, 725.04, 3"	
						25	234	298	557		625	25902	557	FT	CONDUIT, JACKED OR DRILLED, 725.04, 4"	
								4	4		625	26251	4	EACH	LUMINAIRE, CONVENTIONAL, AS PER PLAN, 80 WATT LED, 120 VOLTS	79
							332	655	987		625	29001	987	FT	TRENCH, AS PER PLAN	79
						50			50		625	29400	50	FT	TRENCH IN PAVED AREA	
								13	13		625	30701	13	EACH	PULL BOX, 725.08, 18", AS PER PLAN	78
							7		7		625	30707	7	EACH	PULL BOX, 725.08, 24", AS PER PLAN	78
							9		9		625	32001	9	EACH	GROUND ROD, AS PER PLAN	81
								1	1		625	34001	1	EACH	POWER SERVICE, AS PER PLAN	80
							242	955	1,197		625	36011	1,197	FT	UNDERGROUND WARNING/MARKING TAPE, AS PER PLAN	
							10		10		632	05007	10	EACH	VEHICULAR SIGNAL HEAD, (LED), 3-SECTION, 12" LENS, 1-WAY, POLYCARBONATE, AS PER PLAN	79
							~~4~~		~~4~~		~~632~~	~~05087~~	~~4~~	~~EACH~~	~~VEHICULAR SIGNAL HEAD, (LED), 5-SECTION, 12" LENS, 1-WAY, POLYCARBONATE, AS PER PLAN~~	79
							~~9~~		~~9~~		~~632~~	~~20721~~	~~9~~	~~EACH~~	~~PEDESTRIAN SIGNAL HEAD (LED), TYPE D2, AS PER PLAN~~	80
							14		14		632	25000	14	EACH	COVERING OF VEHICULAR SIGNAL HEAD	
							~~9~~		~~9~~		~~632~~	~~25010~~	~~9~~	~~EACH~~	~~COVERING OF PEDESTRIAN SIGNAL HEAD~~	
							9		9		632	26001	9	EACH	PEDESTRIAN PUSHBUTTON, AS PER PLAN	80
							1,744		1,744		632	40201	1,744	FT	SIGNAL CABLE, 2 CONDUCTOR, NO. 14 AWG, AS PER PLAN	80
							3,754		3,754		632	40501	3,754	FT	SIGNAL CABLE, 5 CONDUCTOR, NO. 14 AWG, AS PER PLAN	80
							1,571		1,571		632	40701	1,571	FT	SIGNAL CABLE, 7 CONDUCTOR, NO. 14 AWG, AS PER PLAN	80
							4		4		632	64011	4	EACH	SIGNAL SUPPORT FOUNDATION, AS PER PLAN	80
							5		5		632	64021	5	EACH	PEDESTAL FOUNDATION, AS PER PLAN	80
								502	502		632	69950	502	FT	SERVICE CABLE, MISC.: 3 CONDUCTOR, NO. 2 AWG	80
								30	30		632	69201	30	FT	POWER CABLE, 2 CONDUCTOR, NO. 4 AWG, AS PER PLAN	80
							4		4		632	77233	4	EACH	SIGNAL SUPPORT, MECHANICAL DAMPER FOR TC-81.21 MAST ARM (GREATER THAN 39' IN LENGTH), AS PER PLAN	80
							2		2		632	79131	2	EACH	COMBINATION SIGNAL SUPPORT, TYPE TC-81.22, DESIGN 12, AS PER PLAN	80
							2		2		632	79141	2	EACH	COMBINATION SIGNAL SUPPORT, TYPE TC-81.22, DESIGN 13, AS PER PLAN	80
							1		1		632	89601	1	EACH	PEDESTAL, 8', AS PER PLAN	80
							4		4		632	90010	4	EACH	PEDESTAL, MISC.:PEDESTAL, 15'. TRANSFORMER BASE, AS PER PLAN	80
							1		1		632	90101	1	EACH	REMOVAL OF TRAFFIC SIGNAL INSTALLATION, AS PER PLAN	80
							2		2		632	90400	2	EACH	SIGNALIZATION, MISC.: LED, NO RIGHT TURN SIGN, SYMBOL TYPE	80
								1,048	1,048		632	90500	1,048	FT	SIGNALIZATION, MISC.: ILLUMINATED SIGN WIRING	80
								1,048	1,048		632	90500	1,048	FT	SIGNALIZATION, MISC.: OUTLET RECEPTACLE WIRING	80
							1		1		633	99000	1	EACH	CONTROLLER ITEM, MISC.: CONTROLLER UNIT, TYPE TS2/A2, WITH CABINET, TYPE TS2	81
							1		1		633	67100	1	EACH	CABINET FOUNDATION	
							1		1		633	67201	1	EACH	CONTROLLER WORK PAD, AS PER PLAN	82
							1		1		633	75001	1	EACH	UNINTERRUPTIBLE POWER SUPPLY (UPS), 1000 WATT, AS PER PLAN	81
							1		1		815	30001	1	EACH	SPREAD SPECTRUM RADIO, AS PER PLAN	81
							1		1		816	30001	1	EACH	VIDEO DETECTION SYSTEM, AS PER PLAN	81

CALCULATED SEA
CHECKED ALZ

Addendum #1 (Issued 3/24/22)

GENERAL SUMMARY

LUC-2-22.51

M:\9105 (City of Oregon - LUC-2-22.5\Navarre & Coy Safety Improvements)\09596_LUC-2-22.5\Design\Roadway\Sheets\09596_GG001.dgn Sheet 3/15/2022 7:27:15 AM CMS

REF NO.	SHEET NO.	STATION TO STATION						606 GUARDRAIL, TYPE MGS WITH LONG POSTS (FT)	606 ANCHOR ASSEMBLY, TYPE T (EACH)	608 4" CONCRETE WALK (SF)	608 6" CONCRETE WALK (SF)	608 6" CONCRETE WALK, AS PER PLAN (SF)	608 CURB RAMP, AS PER PLAN (SF)	609 COMBINATION CURB AND GUTTER, TYPE 2, AS PER PLAN (FT)	609 CURB, TYPE 3-B, AS PER PLAN (FT)	609 CURB, TYPE 6 (FT)	609 9" CONCRETE TRAFFIC ISLAND (SY)	609 8" CONCRETE TRAFFIC ISLAND, AS PER PLAN, TRUCK APRON (SY)	611 MANHOLE ADJUSTED TO GRADE (EACH)	SPECIAL GAS VALVE BOX ADJUSTED TO GRADE (EACH)	623 MONUMENT BOX ADJUSTED TO GRADE (EACH)	638 FIRE HYDRANT AND GATE VALVE REMOVED AND RESET (EACH)	638 VALVE BOX ADJUSTED TO GRADE (EACH)	638 SERVICE BOX ADJUSTED TO GRADE (EACH)
C1	41	1186+53	LT		1187+00	LT								47										
I1	41	1183+94	LT/RT		1187+00	LT											209							
U1	41	1184+41	RT																1					
U2	41	1184+82	LT																1					
W1	41	1186+53	LT		1186+83	LT				177														
C2 - C4	NOT USED																							
C5	42	1187+00	LT		1188+22	LT								132										
C6	42	1187+61	RT		1188+18	RT								75										
C7	42	1188+75	LT		1192+00	LT								298	38									
C8	42	1188+82	RT		1190+86	RT								123										
I2 - I4	NOT USED																							
I5	42	1187+00	LT		1187+77	LT											34							
I6	42	1189+41	RT		1192+00	LT/RT											139							
M1	42	1188+53	CL																		1			
P1	42	1188+76	LT		1188+98	LT												30						
S1	42	1188+16	LT		1188+21	LT													2					
S2	42	1188+20	RT																1					
S3	42	1189+65	LT																1					
S4	42	1191+51	LT																1					
U3 - U4	NOT USED																							
U5	42	1187+59	LT																					1
U6	42	1188+23	LT		1188+38	LT													2					
U7	42	1188+30	RT																	1				
U8	42	1188+38	RT		1188+68	RT													2					
U9	42	1188+76	LT																				1	
U10	42	1188+77	LT		1188+92	LT													2					
U11	42	1188+84	LT																	1				
U12	42	1188+77	RT																1					
U13	42	1189+53	LT																1					
U14	42	1187+33	LT																					1
U15	42	1189+17	LT																			1		
W2 - W5	NOT USED																							
W6	42	1187+24	LT		1188+21	LT						827	232											
W7	42	1188+83	LT		1189+50	LT				476	69		134											
W8	42	1187+72	RT		1188+04	RT						225	239											
W9	42	1188+80	RT		1189+16	RT				103	41		240											
W10	42	1190+06	RT		1190+39	RT				157														
W11	42	1190+75	RT		1191+54	RT				394														
W12	42	1191+78	RT		1192+00	RT				105														
C9 - C13	NOT USED																							
C14	43	1192+00	LT		1193+86	LT								188										
TOTALS CARRIED TO GENERAL SUMMARY										1412	110	1052	845	863	38		382	30	15	2	1	1	1	2

CALCULATED SEA
CHECKED ALZ

Addendum #1 (Issued 3/24/22)

ROADWAY SUBSUMMARY

LUC-2-22.51

M:\19105 (City of Oregon - LUC-2-22.51\Navarre & Coy Safety Improvements\109596_LUC-2-22.51\Design\Roadway\Sheets\109596_GS001.dgn Sheet 3/24/2022 10:03:35 AM ADC

REF NO.	SHEET NO.	STATION TO STATION						606 GUARDRAIL, TYPE MGS WITH LONG POSTS FT	606 ANCHOR ASSEMBLY, TYPE T EACH	608 4" CONCRETE WALK SF	608 6" CONCRETE WALK SF	608 6" CONCRETE WALK, AS PER PLAN SF	608 CURB RAMP, AS PER PLAN SF	609 COMBINATION CURB AND GUTTER, TYPE 2, AS PER PLAN FT	609 CURB, TYPE 3-B, AS PER PLAN FT	609 CURB, TYPE 6 FT	609 6" CONCRETE TRAFFIC ISLAND SY	609 8" CONCRETE TRAFFIC ISLAND, AS PER PLAN, TRUCK APRON SY	611 MANHOLE ADJUSTED TO GRADE EACH	SPECIAL GAS VALVE BOX ADJUSTED TO GRADE EACH	623 MONUMENT BOX ADJUSTED TO GRADE EACH	638 FIRE HYDRANT AND GATE VALVE REMOVED AND RESET EACH	638 VALVE BOX ADJUSTED TO GRADE EACH	638 SERVICE BOX ADJUSTED TO GRADE EACH
				TO																				
I7 - I10	NOT USED																							
I11	43	1192+00	LT/RT		1192+83	LT											69							
U16 - U17	NOT USED																							
U18	43	1193+30	LT																1					
W13 - W14	NOT USED																							
W15	43	1192+00	RT		1193+40	RT				634			70											
W16	43	1192+09	LT		1192+36	LT				50	85													
W17	43	1192+68	LT		1192+87					94														
W18	43	1193+69	RT		1193+81	RT							63											
C15 - C18	NOT USED																							
C19	44	46+53	LT		49+00	LT								248										
C20	44	46+21	RT		49+00	RT								281										
U19 - U22	NOT USED																							
U23	44	46+19																	1					
U24	44	46+86	RT																			1		
U25	44	48+81	LT																					
C21 - C24	NOT USED																							
C25	45	51+00	LT		54+00	LT								302										
C26	45	51+00	RT		52+56	RT								116	40									
G1	45	51+60	LT		51+69	LT		13	1															
G2	45	51+54	RT		52+65	RT		100	1															
P2-P4	NOT USED																							
P5	45	51+00	RT		51+40	RT												38						
W19 -W21	NOT USED																							
W22	45	51+00	RT		51+40	RT				238														
W23	45	51+00	LT		54+00	LT					245	209												
C27 - C30	NOT USED																							
C31	46	54+00	LT		54+26	LT								36										
W24 - W27	NOT USED																							
W28	46	54+00	LT		54+24	LT				75			52											
TOTALS CARRIED TO GENERAL SUMMARY								113	2	1091	330	209	185	983	40		69	38	2			1		

CALCULATED SEA
CHECKED ALZ

Addendum #1 (Issued 3/24/22)

ROADWAY SUBSUMMARY

LUC-2-22.51

M:\19105 (City of Oregon - LUC-2-22.5)\Navarre & Coy Safety Improvements)\109596_LUC-2-22.5\Design\Roadway\Sheets\109596_GS001.dgn Sheet 3/24/2022 10:03:54 AM ADC

Addendum #1 (Issued 3/24/22)

REF. NO.	SHEET NO.	STATION TO STATION			625 CONDUIT, 3", 725.05, AS PER PLAN	625 CONDUIT, 4", 725.05, AS PER PLAN	625 CONDUIT, 4", 725.04	625 CONDUIT, JACKED OR DRILLED, 725.04, 4"	625 TRENCH, AS PER PLAN	625 PULL BOX, 725.08, 24", AS PER PLAN	625 GROUND ROD, AS PER PLAN	625 UNDERGROUND WARNING/MARKING TAPE, AS PER PLAN	632 VEHICULAR SIGNAL HEAD, (LED), 3-SECTION, 12" LENS, 1-WAY, POLYCARBONATE, AS PER PLAN	632 VEHICULAR SIGNAL HEAD, (LED), 5-SECTION, 12" LENS, 1-WAY, POLYCARBONATE, AS PER PLAN	632 PEDESTRIAN SIGNAL HEAD (LED), TYPE D2, AS PER PLAN	632 COVERING OF VEHICULAR SIGNAL HEAD	632 COVERING OF PEDESTRIAN SIGNAL HEAD	632 PEDESTRIAN PUSHBUTTON, AS PER PLAN	632 SIGNAL CABLE, 2 CONDUCTOR, NO. 14 AWG, AS PER PLAN	632 SIGNAL CABLE, 5 CONDUCTOR, NO. 14 AWG, AS PER PLAN	632 SIGNAL CABLE, 7 CONDUCTOR, NO. 14 AWG, AS PER PLAN	632 SIGNAL SUPPORT FOUNDATION, AS PER PLAN	632 PEDESTAL FOUNDATION, AS PER PLAN	632 SIGNAL SUPPORT, MECHANICAL DAMPER FOR 81.22 MAST ARM (GREATER THAN 39' IN LENGTH), AS PER PLAN	632 COMBINATION SIGNAL SUPPORT, TYPE TC-81.22, DESIGN 12, AS PER PLAN	632 COMBINATION SIGNAL SUPPORT, TYPE TC-81.22, DESIGN 13, AS PER PLAN	632 PEDESTAL, 8', AS PER PLAN	632 PEDESTAL, MISC.:PEDESTAL, 15', TRANSFORMER BASE, AS PER PLAN	632 REMOVAL OF TRAFFIC SIGNAL INSTALLATION, AS PER PLAN	632 SIGNALIZATION, MISC.: LED, NO RIGHT TURN SIGN, SYMBOL TYPE	633 CONTROLLER ITEM, MISC.: CONTROLLER UNIT, TYPE TS2/A2, WITH CABINET, TYPE TS2	633 CABINET FOUNDATION	633 CONTROLLER WORK PAD, AS PER PLAN	633 UNINTERRUPTIBLE POWER SUPPLY (UPS), 1000 WATT, AS PER PLAN	815 SPREAD SPECTRUM RADIO, AS PER PLAN	816 VIDEO DETECTION SYSTEM, AS PER PLAN
					FT	FT	FT	FT	FT	EACH	EACH	FT	EACH	EACH	EACH	EACH	EACH	EACH	FT	FT	FT	EACH	EACH	EACH	EACH	EACH	EACH	EACH	EACH	EACH	EACH	EACH	EACH	EACH	EACH	EACH	EACH
			TO																																		
PS-1	87	1188+05.00 63.8' LT									1		1		1	1	1	1	14	42			1					1										
PB-1 TO PS-1	87	1187+88.00 57.0' LT		1188+05.00 63.8' LT	21				21			21							21	42																		
PB-1	87	1187+88.00 57.0' LT								1									10	25	5																	
SP-1	87	1187+94.00 58.2' LT									1		2	1	1	3	1	1	14	173	57	1		1		1												
PB-1 TO SP-1	87	1187+88.00 57.0' LT		1187+94.00 58.2' LT	3				3			3							3	9	3																	
PB-1 TO PB-2	87	1187+88.00 57.0' LT		1187+79.00 51.1' RT			51	70	51										242	605	121																
PB-2	87	1187+79.00 51.1' RT								1									15	35	5																	
PB-2 TO PS-2	87	1187+79.00 51.1' RT		1187+84.00 42.8' RT	10				10			10							10	20																		
PB-2 TO CONTROLLER	87	1187+79.00 51.1' RT		1187+82.00 53.0' RT		20	20		10			10							160	340	80																	
CONTROLLER	87	1187+82.00 53.0' RT																	120	270	30								1		1	1	1	1	1	1		
PB-2 TO PB-3	87	1187+79.00 51.1' RT		1187+99.00 64.8' RT	26				26			26							130	340	28																	
PS-2	87	1187+84.00 42.8' RT									1		1		1	1	1	1	14	42			1					1										
PB-3	87	1187+99.00 64.8' RT								1									5	10	5																	
PB-3 TO SP-2	87	1187+99.00 64.8' RT		1188+02.00 70.5' RT	7				7			7							7	14	7																	
SP-2	87	1188+02.00 70.5' RT									1		1	1	1	2	1	1	14	80	74	1		1	1					1								
PB-3 TO PB-7	87	1187+99.00 64.8' RT		1188+94.00 66.7' RT			20	75	20										380	760	285																	
PB-7	87	1188+94.00 66.7' RT								1									10	30																		
PB-7 TO PS-4	87	1188+94.00 66.7' RT		1188+87.00 75.8' RT	14				14			14							14	28																		
PS-4	87	1188+87.00 75.8' RT									1		1		1	1	1	1	14	42			1					1										
PB-7 TO PB-6	87	1188+94.00 66.7' RT		1189+50.00 53.3' RT	60				60			60							120	120	180																	
~~PB-7 TO PS-5~~	~~87~~	~~1188+94.00 66.7' RT~~		~~1188+93.00 61.2' RT~~	~~6~~				~~6~~			~~6~~							~~6~~	~~6~~																		
PS-5	87	1188+93.00 61.2' RT									1				1		1	1	14	42			1				1											
~~PB-6~~	~~87~~	~~1189+50.00 53.3' RT~~								~~1~~																												
PB-7 TO SP-4	87	1188+94.00 66.7' RT		1189+05.00 60.9' RT	12				12			12							12	48																		
SP-4	87	1189+05.00 60.9' RT									1		3		1	3	1	1	14	239		1		1		1												
PB-5	87	1189+52.00 54.7' LT								1																												
PB-6 TO PB-5	87	1189+50.00 53.3' RT		1189+52.00 54.7' LT			19	89	19										216	216	324																	
PB-5 TO PB-4	87	1189+52.00 54.7' LT		1189+11.00 70.8' LT	54				54			54							108	108	162																	
PB-4	87	1189+11.00 70.8' LT								1									10	10	15																	
PB-4 TO PS-3	87	1189+11.00 70.8' LT		1189+14.00 59.4' LT	12				12			12							12	12	12																	
PS-3	87	1189+14.00 59.4' LT									1			1	1	1	1	1	14	18	24		1					1										
PB-4 TO SP-3	87	1189+11.00 70.8' LT		1189+05.00 74.9' LT	7				7			7							7	7	14																	
SP-3	87	1189+05.00 74.9' LT									1		1	1	1	2	1	1	14	21	140	1		1	1					1								
TOTALS CARRIED TO GENERAL SUMMARY					232	20	110	234	332	7	9	242	10	4	9	14	9	9	1744	3754	1571	4	5	4	2	2	1	4	1	2	1	1	1	1	1	1

CALCULATED CMS
CHECKED CML

SIGNALIZATION SUBSUMMARY

LUC-2-22.51

M:\9105 (City of Oregon - LUC-2-22.5)\Navarre & Coy Safety Improvements)\09596_LUC-2-22.5\Design\Signals\Sheets\09596_CS001.dgn Sheet 3/15/2022 7:18:22 AM CMS

EXISTING STRUCTURE

TYPE: REINFORCED CONCRETE SLAB ON WALL ABUTMENTS
SPANS: 12'±
ROADWAY: 36'± EDGE/EDGE PAVEMENT
LOADING: HS-20-44
SKEW: 22°± RF
STRUCTURAL FILE NUMBER: 4863208
DATE BUILT: 1917 (1985 WIDENING)
DISPOSITION: TO BE REMOVED

PROPOSED STRUCTURE

TYPE: PRECAST REINFORCED CONCRETE BOX CULVERT
12' SPAN x 6' RISE (OPENING) x 241'-8" LONG
WITH REINFORCED CONCRETE HEADWALLS AND WINGWALLS

SPAN: 13.5' (ALONG COY)
ROADWAY: 45' TOE/TOE CURB
LOADING: HL-93 & ALTERNATE MILITARY
SKEW: 27° 00' 00" RF (WITH COY)
WEARING SURFACE: ASPHALT CONCRETE
COORDINATES: LAT N 41° 38' 15.26" LONG W 83° 28' 02.14"

EXTREME CARE SHALL BE TAKEN BY THE CONTRACTOR NOT TO DISTURB OR DAMAGE EXISTING UTILITIES. CONTRACTOR SHALL VERIFY LOCATION AND INVERT ELEVATIONS OF EXISTING UTILITIES AND SHALL REPORT ANY INTERFERENCE OR DISCREPANCIES TO THE ENGINEER.

Addendum #1 (Issued 3/24/22)

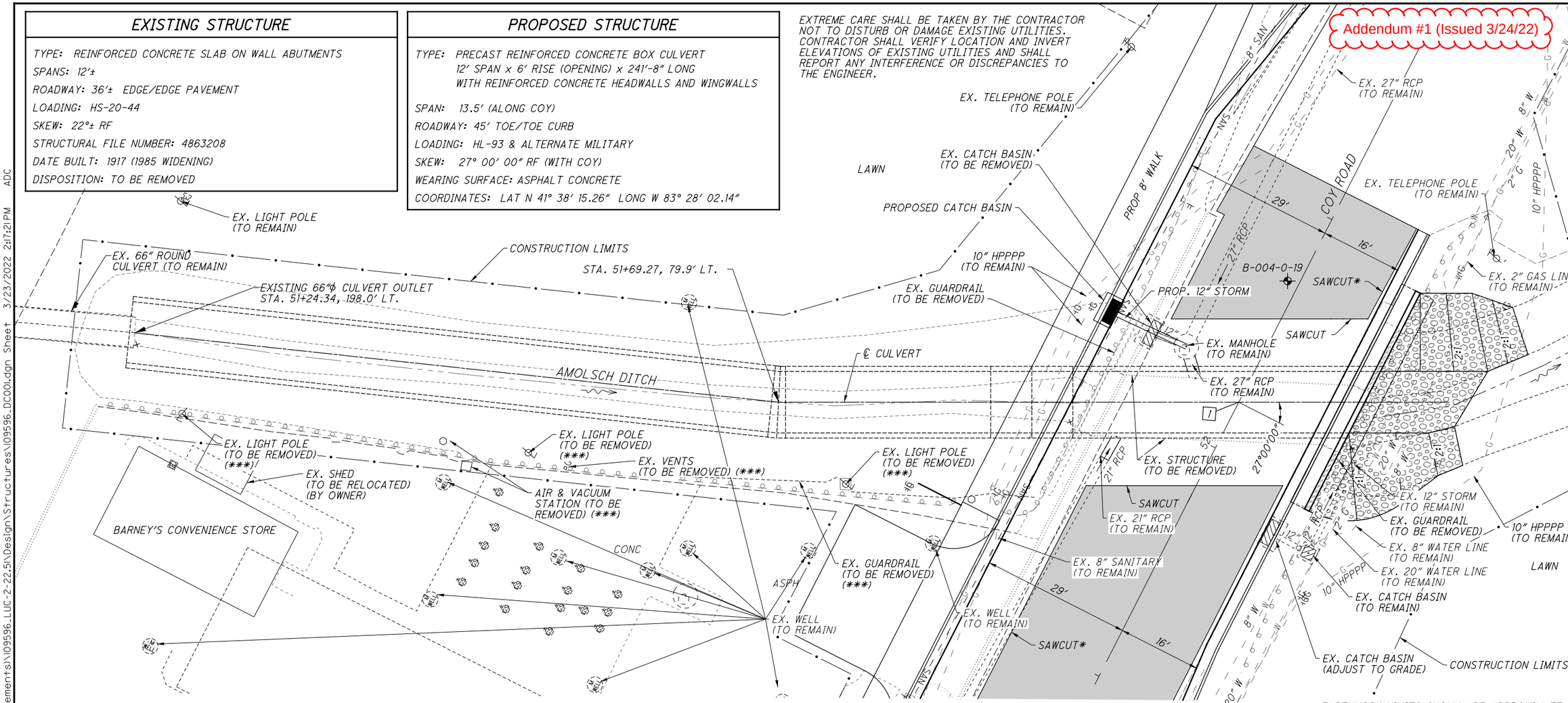

PLAN

1. STA 52+10.00
2. EDGE OF WALK EL 604.95
3. EDGE OF CURB EL 604.88
4. 21" ϕ STORM 51+94.02, 18.14' LT INV EL 598.38, CONNECT TO CULVERT
5. 27" ϕ STORM 52+11.35, 10.57' LT INV EL 597.48, CONNECT TO CULVERT

(***) - AS APPROVED BY THE ENGINEER. SEE NOTE ON SHEET 3 OF 7 FOR FURTHER DETAILS.

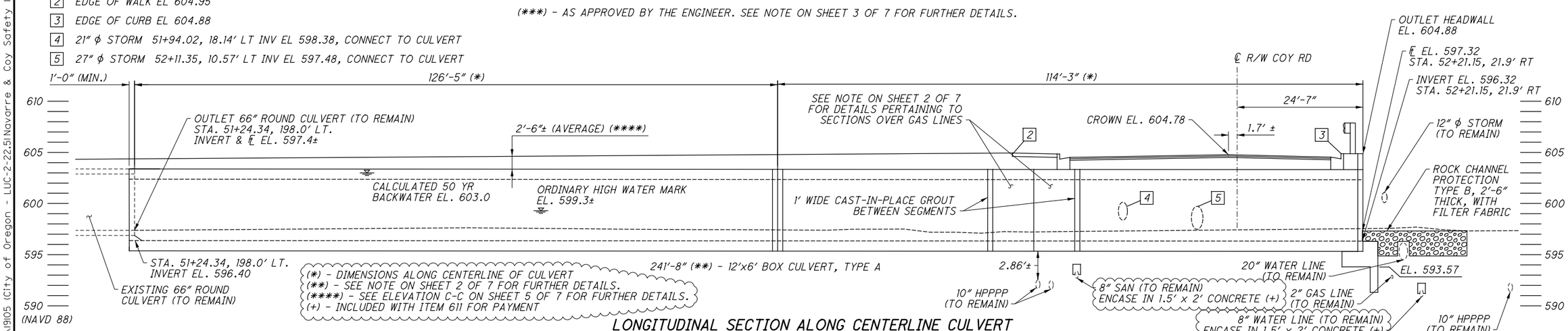

LONGITUDINAL SECTION ALONG CENTERLINE CULVERT

HORIZONTAL SCALE IN FEET 0 5 10 20

CALCULATED NBL
CHECKED SAM

CULVERT GENERAL PLAN AND LONGITUDINAL SECTION

LUC-2-22.51

M:\9\05 (City of Oregon - LUC-2-22.51\Navarre & Coy Safety Improvements\109596_LUC-2-22.51\Design\Structures\109596_DC001.dgn Sheet 3/23/2022 2:17:21 PM ADC

GENERAL NOTES

DESIGN SPECIFICATIONS: THIS STRUCTURE CONFORMS TO THE 8TH EDITION OF THE "LRFD BRIDGE DESIGN SPECIFICATIONS" ADOPTED BY THE AMERICAN ASSOCIATION OF STATE HIGHWAY AND TRANSPORTATION OFFICIALS, 2002 AND THE ODOT BRIDGE DESIGN MANUAL, 2019.

DESIGN DATA: THE FOLLOWING DESIGN DATA IS ASSUMED:

INTERNAL ANGLE OF FRICTION (ϕ) = 30 DEGREES
COEFFICIENT OF FRICTION (μ) = 0.30
UNIT WEIGHT OF SOIL = 120 PCF
UNIT WEIGHT OF CONCRETE = 150 PCF
SLOPE OF BACKFILL = 2:1
MAXIMUM FOUNDATION BEARING PRESSURE = 2000 P.S.F.
ALOWABLE FOUNDATION BEARING PRESSURE = 4000 P.S.F.
CONCRETE CLASS C - COMPRESSIVE STRENGTH 4000 PSI (FOOTING, WINGWALL AND FORESLOPE WALL)
REINFORCING STEEL - ASTM A615, A616, OR A617 GRADE 60 MINIMUM YIELD STRENGTH 60,000 PSI (ALL REINFORCING SHALL BE EPOXY COATED)
PRECAST BOX CULVERT - ASTM C 1433

PRECAST CONCRETE:
AT THE OPTION OF THE CONTRACTOR, PRECAST HEADWALLS MAY BE FURNISHED PER ITEM 602.03 PRECAST STRUCTURES, PROVIDED THEY ARE SIZED TO MEET THE SOIL LOADING AND RESISTANCE PARAMETERS, AND MEET OR EXCEED THE MATERIAL STRENGTHS AND WALL LIMITS AS SHOWN AND SPECIFIED. FULL COMPENSATION FOR THE PRECAST SUBSTITUTION IS THE VOLUME OF CONCRETE AND THE WEIGHT OF THE REINFORCING STEEL FOR THE CORRESPONDING CAST-IN-PLACE STRUCTURE.

FORESLOPE WALL, JOINT AND INLET ANCHOR DOWELS: ANCHOR PER CMS 510 WITH NONSHRINK, NONMETALLIC GROUT CONFORMING TO CMS 705.20 AND TO A DEPTH SPECIFIED ON SHEET 5/6. PAYMENT FOR DOWEL HOLES, GROUT AND INSTALLATION SHALL BE INCLUDED WITH ITEM 511.

AS AN ALTERNATIVE TO RESIN BONDING, THREADED INSERTS OR NONPROTRUDING MECHANICAL CONNECTORS CAST INTO THE CULVERT BY THE MANUFACTURER MAY BE USED PROVIDED THEY CAN RESIST AN ULTIMATE PULL-OUT STRENGTH OF 12 KIPS AND MAINTAIN A MINIMUM COVER OF 3 INCHES AT THE BOTTOM OF THE CULVERT SLAB. MECHANICAL CONNECTORS MUST PROVIDE AN "L-SHAPED" BAR INSIDE THE CULVERT WITH A MINIMUM HORIZONTAL LENGTH OF 12 INCHES. PAYMENT FOR INSERTS OR MECHANICAL CONNECTORS SHALL BE INCLUDED WITH ITEM 603.

FOUNDATION BEARING RESISTANCE:
WINGWALL FOOTINGS, AS DESIGNED, PRODUCE A MAXIMUM SERVICE LOAD PRESSURE OF 2 KIPS PER SQUARE FOOT AND A MAXIMUM STRENGTH LOAD PRESSURE OF 4 KIPS PER SQUARE FOOT. THE FACTORED BEARING RESISTANCE IS 1.5 KIPS PER SQUARE FOOT.

ITEM 611, 12' X 6' CONDUIT, TYPE A, 706.05, AS PER PLAN:
CONNECT EXISTING STORM DRAINS TO BOX CULVERT AS SHOWN ON SHEET 3.

THE LENGTH SHOWN IS BASED ON THE CENTERLINE OF CULVERT. THE LENGTH MAY CHANGE SLIGHTLY, BASED ON THE FABRICATOR, IF THE LAST CULVERT SEGMENT AT THE OUTLET IS PRECAST. THE CONTRACTOR MAY ELECT TO CAST-IN-PLACE THE OUTLET AS AN ALTERNATIVE. CONTRACTOR MUST SUBMIT DRAWINGS TO CITY FOR ENGINEERS APPROVAL PRIOR TO CASTING IN PLACE.

SECTIONS OVER GAS LINES SHALL BE PLACED PER THE PLAN DETAILS AND CONSTRUCTED SO THAT THEY HAVE A 3 INCH GAP MINIMUM BETWEEN ENDS OF SEGMENTS AND ARE NOT CONNECTED. THE INTENT IS TO ALLOW FOR FUTURE REMOVAL IN THE EVENT THAT ACCESS IS REQUIRED.

CONCRETE ENCASEMENT FOR EXISTING 8" SANITARY AND 8" WATERLINE SHALL BE INCLUDED WITH THIS ITEM FOR PAYMENT. ENCASEMENT SHALL EXTEND 6 FEET BEYOND THE LIMITS OF THE PROPOSED CULVERT AND CONSIST OF CLASS QC MISC OR QC 1 CONCRETE. EXCAVATION REQUIRED FOR THE ENCASEMENT SHALL ALSO BE INCLUDED WITH THIS ITEM.

ALL MATERIALS, EQUIPMENT AND LABOR FOR THE CAST-IN-PLACE GROUT WORK AND EXISTING PIPE CONCRETE ENCASEMENT IS TO BE PAID FOR WITH ITEM 611, 12' X 6' CONDUIT, TYPE A, 706.05, AS PER PLAN.

UTILITIES:
THE EXISTING TELEPHONE POLE AT THE NORTHEAST CORNER IS TO REMAIN IN PLACE DURING CONSTRUCTION. THE POLE WILL NEED TO BE HELD UNTIL THE NEW WINGWALLS ARE CONSTRUCTED AND BACKFILLED. AT NO POINT SHALL THE TRUCK HOLDING THE POLE BLOCK ACCESS TO THE CHURCH DRIVE. THE CONTRACTOR IS TO COORDINATE WITH RANDY SWOPE (TOLEDO EDISON) FOR THE HOLDING OF THE POLE. THE CONTRACTOR IS REQUIRED TO PROVIDE ADVANCED NOTICE (AT LEAST FIVE (5) WORKING DAYS) BEFORE ANY CONSTRUCTION WORK IS PERFORMED.

THE FOLLOWING IS THE CONTACT INFORMATION FOR THE TELEPHONE POLE UTILITY.

TOLEDO EDISON
6099 ANGOLA ROAD
HOLLAND, OH 43528
419-249-5218
RANDY SWOPE
RRSWOPE@FIRSTENERGYCORP.COM

POROUS BACKFILL WITH GEOTEXTILE FABRIC: 1'-6" THICK SHALL BE PLACED BEHIND THE WINGWALLS ONLY AND SHALL EXTEND TO 12" BELOW THE EMBANKMENT SURFACE. GEOTEXTILE FABRIC SHALL BE PLACED BETWEEN THE POROUS BACKFILL AND REPLACED EXCAVATION ADJACENT TO THE STRUCTURE. IT SHALL TURN UNDER THE BOTTOM OF THE POROUS BACKFILL AND RETURN 6" ABOVE THE TOP ELEVATION OF THE WEEPHOLE. 2 CUBIC FEET OF BAGGED NO. 3 AGGREGATE SHALL BE PLACED BEHIND EACH WEEPHOLE AND INCLUDED WITH THE POROUS BACKFILL FOR PAYMENT.

WEEPHOLES SHALL BE PLACED 6" TO 12" ABOVE THE NORMAL WATER ELEVATION OR GROUND LINE AND SHALL HAVE A MAXIMUM SPACING OF 10'-0". A MINIMUM OF ONE WEEPHOLE SHALL BE PROVIDED PER WINGWALL.

PREFORMED EXPANSION JOINT FILLER: PREFORMED EXPANSION JOINT FILLER (PEJF) CONFORMING TO CMS 705.03, 1 INCH THICK, SHALL BE PLACED ABOVE THE FOOTING BETWEEN THE SIDES OF THE BOX CULVERT AND THE ENDS OF THE WINGWALLS. PAYMENT FOR MATERIALS AND INSTALLATION SHALL BE INCLUDED WITH ITEM 516 - 1" PREFORMED EXPANSION JOINT FILLER.

WATERPROOFING: TYPE 2 WATERPROOFING, PER CMS 512 AND 711.25, SHALL BE APPLIED VERTICALLY DOWN THE ENTIRE SIDES OF THE PRECAST CULVERT WHICH SHALL BE IN CONTACT WITH THE BACKFILL. A MINIMUM LAP LENGTH OF 6" SHALL BE USED AT THE JOINTS IN THE WATERPROOFING. PAYMENT FOR THE MEMBRANE WATERPROOFING SHALL BE AT THE CONTRACT PRICE BID PER SQUARE YARD FOR ITEM 512 - TYPE 2 WATERPROOFING.

TYPE 3 WATERPROOFING, PER CMS 512 AND 711.29 SHALL BE APPLIED TO THE ENTIRE TOP SURFACE OF THE PRECAST CULVERT SECTIONS AND SHALL EXTEND ONE FOOT VERTICALLY DOWN THE SIDES FOR ALL PORTIONS OF THE CULVERT WHICH SHALL BE IN CONTACT WITH THE BACKFILL. PAYMENT FOR THE MEMBRANE WATERPROOFING SHALL BE AT THE CONTRACT PRICE BID PER SQUARE YARD FOR ITEM 512 - TYPE 3 WATERPROOFING.

SEALING OF FORESLOPE WALL AND WINGWALLS: ALL EXPOSED FORESLOPE WALL AND WINGWALL CONCRETE SHALL BE SEALED WITH EPOXY-URETHANE SEALER. THE LIMITS SHALL BE AS SHOWN IN THE DIAGRAMS BELOW. PAYMENT FOR THE EPOXY-URETHANE SEALER SHALL BE PER ITEM 512 - SEALING OF CONCRETE SURFACES.

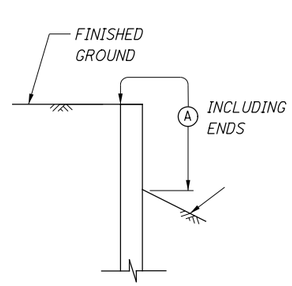

OUTLET - WINGWALL

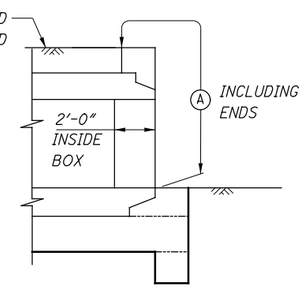

OUTLET - FORESLOPE WALL AND PRECAST BOX (CULVERT OUTLET BEVEL SHOWN)

LIMITS OF ITEM 512-SEALING CONCRETE SURFACES

(A) - SEAL ENTIRE CONCRETE SURFACE AREA

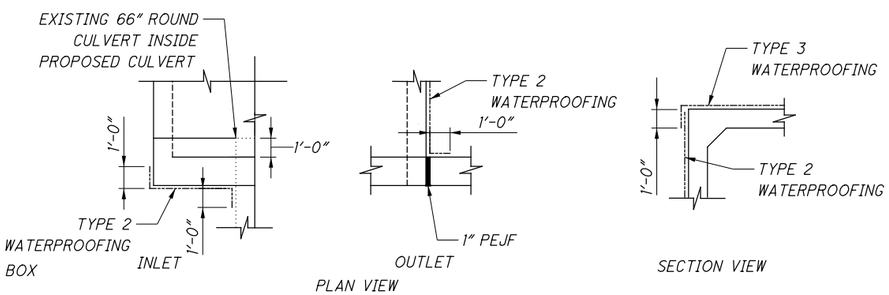

WATERPROOFING DETAILS

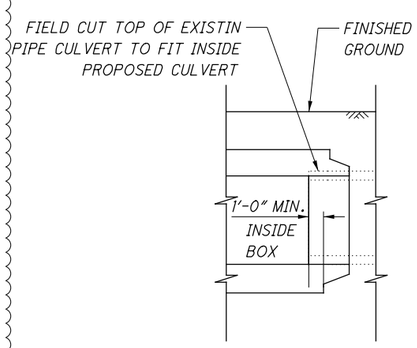

INLET - EXISTING 66" ROUND CULVERT INSIDE PROPOSED CULVERT

ESTIMATED QUANTITIES

ITEM	ITEM EXT	TOTAL	UNIT	DESCRIPTION
202	11001	LUMP		STRUCTURE REMOVED, AS PER PLAN
503	11100	LUMP		COFFERDAMS, CRIBS, AND SHEETING
503	21100	830	CU. YD.	UNCLASSIFIED EXCAVATION
509	10000	3944	LB.	EPOXY COATED REINFORCING STEEL
511	46010	16	CU. YD.	CLASS QC1 CONCRETE, RETAINING/WINGWALL NOT INCLUDING FOOTING
511	46510	29	CU. YD.	CLASS QC1 CONCRETE, FOOTING
511	46610	1	CU. YD.	CLASS QC1 CONCRETE, HEADWALL
512	10100	40	SQ. YD.	SEALING OF CONCRETE SURFACES (EPOXY-URETHANE)
512	33000	450	SQ. YD.	TYPE 2 WATERPROOFING
512	33010	430	SQ. YD.	TYPE 3 WATERPROOFING
516	13600	20	SQ. FT.	1" PREFORMED EXPANSION JOINT FILLER
518	21230	LUMP		POROUS BACKFILL WITH GEOTEXTILE FABRIC
601	32100	95	CU. YD.	ROCK CHANNEL PROTECTION, TYPE B WITH FILTER
611	95801	242	LIN. FT.	12' X 6' CONDUIT, TYPE A, 706.05, AS PER PLAN

NOTE: TOTALS CARRIED TO GENERAL SUMMARY SHEET
ITEM 202 - SEE NOTES ON SHEET 3/7 FOR ADDITIONAL DETAILS

Addendum #1 (Issued 3/24/22)

DESIGN AGENCY
DGL Consulting Engineers, LLC
3455 Briar Field Blvd. Suite E
Maumee, Ohio 43537 (419) 535-1015

DESIGNED	DRAWN	REVIEWED	DATE
NBL	BWP	SAM	11-13-19
CHECKED	REVISED	STRUCTURE FILE NUMBER	
NBL		4863208	

QUANTITIES AND GENERAL NOTES
COY OVER AMOLSCH DITCH

LUC-2-22.51