METROPARKS TOLEDO
HOWARD MARSH

INDEX OF SHEETS

DESCRIPTION	SHEET	FOR CONSTRUCTION
CIVIL TITLE SHEET	C1	7/30/2021
PARKING LOT & BOAT LAUNCH	C2	7/30/2021
BOARDWALK LAYOUT	C3	7/30/2021
BOARDWALK DETAILS	C4	7/30/2021
BOARDWALK DETAILS	C5	7/30/2021
BOAT LAUNCH DETAILS	C6	7/30/2021

PROJECT DESCRIPTION:

CONSTRUCTION OF A 1,077 FT.± LONG BOARDWALK TRAIL AND A 32,000 SQ. FT.± GRAVEL PARKING LOT WITH A BOAT LAUNCH AND KAYAK LAUNCH.

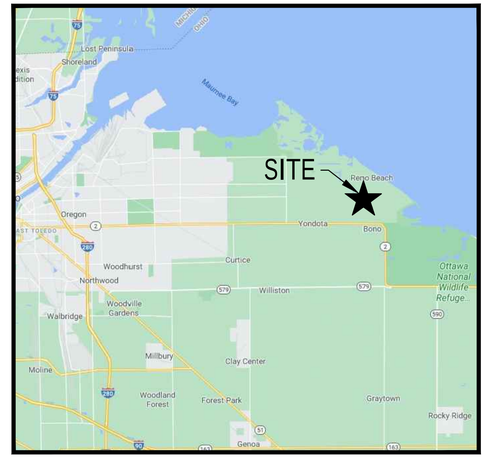

VICINITY MAP

NOT TO SCALE

SITE ADDRESS

611 SOUTH HOWARD ROAD
CURTICE, OH 43412
LUCAS COUNTY

OWNER

METROPARKS TOLEDO
5100 W. CENTRAL AVE.
TOLEDO, OHIO 43615
PHONE: (419) 407-9700

CIVIL ENGINEER

DGL CONSULTING ENGINEERS, LLC
3455 BRIARFIELD BLVD. SUITE E
MAUMEE, OHIO 43537
PHONE: (419) 535-1015

THE INTENT OF THIS PLAN SET AS DESIGNED BY DGL CONSULTING ENGINEERS IS TO SHOW THE LOCATION AND GRADING OF THE PARKING LOT, KAYAK LAUNCH, AND SMALL CRAFT LAUNCH, INCLUDING PEDESTRIAN ACCESS TO AND FROM THESE IMPROVEMENTS. SPECIFIC DETAILS OF THE IMPROVEMENTS HAVE NOT BEEN DESIGNED BY DGL. THESE DETAILS HAVE BEEN PROVIDED BY METROPARKS TOLEDO TO BE INCLUDED AS PLAN INSERT SHEETS.

SCALE: HORIZONTAL 0 20 40
SCALE: 1" = 20'

ABBREVIATION LEGEND

SYMBOL	DESCRIPTION
BLDG	BUILDING
BL	BUILDING LINE
BM	BENCHMARK
CB	CATCH BASIN
CO	CLEANOUT
CONC	CONCRETE
CP	CONTROL POINT
CPP	CORRUGATED POLYETHYLENE PIPE
DE	DRAINAGE EASEMENT
E	EAST, EASTING
ELEV	ELEVATION
EX	EXISTING
FF	FINISHED FLOOR
FO	FIBER OPTIC
FM	FORCE MAIN
FND	FOUNDATION
FT	FOOT, FEET
HW	HEADWALL
IMPERV	IMPERVIOUS
ICW	INTEGRAL CURB AND WALK
INV	INVERT
LL	LOWER LEVEL
MH	MANHOLE
MON	MONUMENT
N	NORTH, NORTHING
NE	NORTHEAST
NW	NORTHWEST
OC	ON CENTER
OFF	OFFSET
RCP	ROCK CHANNEL PROTECTION
RCP	REINFORCED CONCRETE PIPE
R/W	RIGHT OF WAY
RYS	REAR YARD SETBACK
S	SOUTH
SAN	SANITARY
SE	SOUTHEAST
SS	SUMP SERVICE
STA	STATION
STM	STORM
SW	SOUTHWEST
TBR	TO BE REMOVED
TC	TOP OF CURB
T/GR	TOP OF GR
T/RIM	TOP OF RIM
TYP	TYPICAL
UD	UNDERDRAIN
UE	UTILITY EASEMENT
VIT	VITREOUS
W	WEST
WM	WATER MAIN
WS	WATER SERVICE

SYMBOL LEGEND

EXISTING	PROPOSED	DESCRIPTION
		BENCHMARK
		MONUMENT
I.P.F.	I.P.S.	IRON PIN
M	M	MONUMENT BOX
P.K.F.	P.K.S.	PK NAIL
M.N.F.	M.N.S.	MAG NAIL
D.H.F.	D.H.S.	DRILL HOLE
		MONUMENT SPIKE
		TACKED HUB
CB		CATCH BASIN
		CURB INLET
		STORM MANHOLE
SA	SA S	SANITARY MANHOLE
CO	CO	CLEANOUT
E	E	ELECTRIC RISER/PULL BOX
		ELECTRIC METER
E	E	ELECTRIC MANHOLE
		ELECTRIC TRANSFORMER
G	G	GAS METER
G		GAS MARKER
G	G	GAS VALVE
		POWER POLE
		LIGHT POLE
		POWER/LIGHT POLE
		TELEPHONE POLE
		GUY WIRE
T	T	TELEPHONE PEDESTAL
		FIRE HYDRANT
W	W	WATER GATE VALVE
W	W	WATER METER
W	W	WATER MANHOLE
		STUMP
		SHRUB
		TREE-DECIDUOUS
		TREE-EVERGREEN
AC		AIR CONDITIONER
MB	MB	MAIL BOX
		POST
		SATELLITE DISH
		SPRINKLER HEAD
		SIGN
		SIGNAL

LINETYPE LEGEND

EXISTING	PROPOSED	DESCRIPTION	EXISTING	PROPOSED	DESCRIPTION
650	650	INDEX CONTOURS	FO	FO	FIBER OPTIC
649	649	INTERMEDIATE CONTOURS	G	G	GAS
C	C C C	CABLE	T	T	TELEPHONE
E	E	ELECTRIC	S	S	SANITARY
OHE	OHE	OVERHEAD ELECTRIC	FM	FM	FORCE MAIN
OHC	OHC	OVERHEAD CABLE	SL	SL SL	SANITARY LATERAL
OHE	OHT	OVERHEAD TELEPHONE	W	W	WATER
OHU	OHU	OVERHEAD UTILITIES	WS	WS WS	WATER SERVICE

Know what's **below.**
Call before you dig.

UNDERGROUND UTILITIES
Contact Two Working Days Before You Dig
OHIO811.org
Before You Dig
OHIO811, 8-1-1, or 1-800-362-2764
(Non-members must be called directly)

STATE OF OHIO
JOSHUA JAMES O'NEIL
E-69263
REGISTERED
PROFESSIONAL ENGINEER
August 25, 2021

NO	REVISION	DATE
1		
2		
3		
4		
5		
6		
7		
8		
9		

DGL CONSULTING ENGINEERS, LLC
3455 BRIARFIELD BLVD. SUITE E
MAUMEE, OH 43537
PHONE: 419.535.1015
www.dgl-ltd.com

METROPARKS TOLEDO
HOWARD MARSH
BOARDWALK & BOAT LAUNCH
611 SOUTH HOWARD ROAD
CURTICE, OH 43412
LUCAS COUNTY

CIVIL TITLE SHEET

FILE:	21098 CD.dwg
JOB NO.:	21098
DRAWN BY:	EAH
ISSUED:	JULY 30, 2021

C1

PLOTTED: Aug 25, 2021 – 7:32am
DRAWING: M:\21098 (Metroparks Toledo – Howard Marsh Boardwalk & Boat Launch Details)\CIVIL\Dwg\21098 CD.dwg: C01 TITLE HOWARD

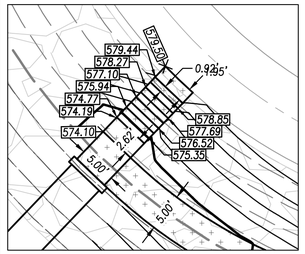

STEP DETAIL

SCALE 1" = 10'

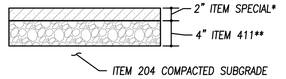

NOTE:

1. *ITEM SPECIAL, 2" STABILIZED CRUSHED AGGREGATE SURFACE COURSE (SCREENINGS), CONFORMING TO OHIO DEPARTMENT OF TRANSPORTATION SPECIFICATION 608.05, CRUSHED AGGREGATE WALK.
2. **ITEM 411, 4" STABILIZED CRUSHED AGGREGATE.

PATH SECTION

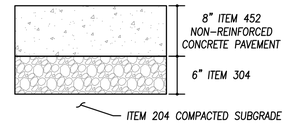

CONCRETE PAVEMENT SECTION

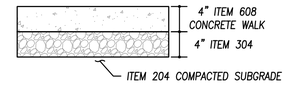

CONCRETE SIDEWALK SECTION

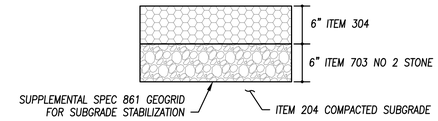

GRAVEL PAVEMENT SECTION

POINT TABLE

POINT #	NORTHING	EASTING	DESCRIPTION
1	724718.909	1757083.443	BEG RAD
2	724748.560	1757053.426	END RAD/CONC
3	724748.559	1757051.109	CORNER
4	724642.506	1757009.203	CORNER
5	724642.402	1756846.575	BEG RAD
6	724687.488	1756801.546	END RAD
7	724723.540	1756801.615	BEG RAD
8	724778.435	1756856.580	END RAD
9	724778.560	1757052.417	BEG RAD/CONC
10	724808.909	1757082.396	END RAD
11	724699.145	1756790.568	BEG CONC
12	724699.145	1756711.986	BEG RAD
13	724696.858	1756697.585	END CONC
14	724663.489	1756666.783	END RAD
15	724626.947	1756658.031	END CL
16	724642.462	1756940.301	BEG PATH RAD
17	724606.051	1756927.694	END PATH RAD
18	724596.998	1756916.510	BEG PATH RAD
19	724611.409	1756830.040	END PATH RAD
20	724625.785	1756806.272	END PATH RAD

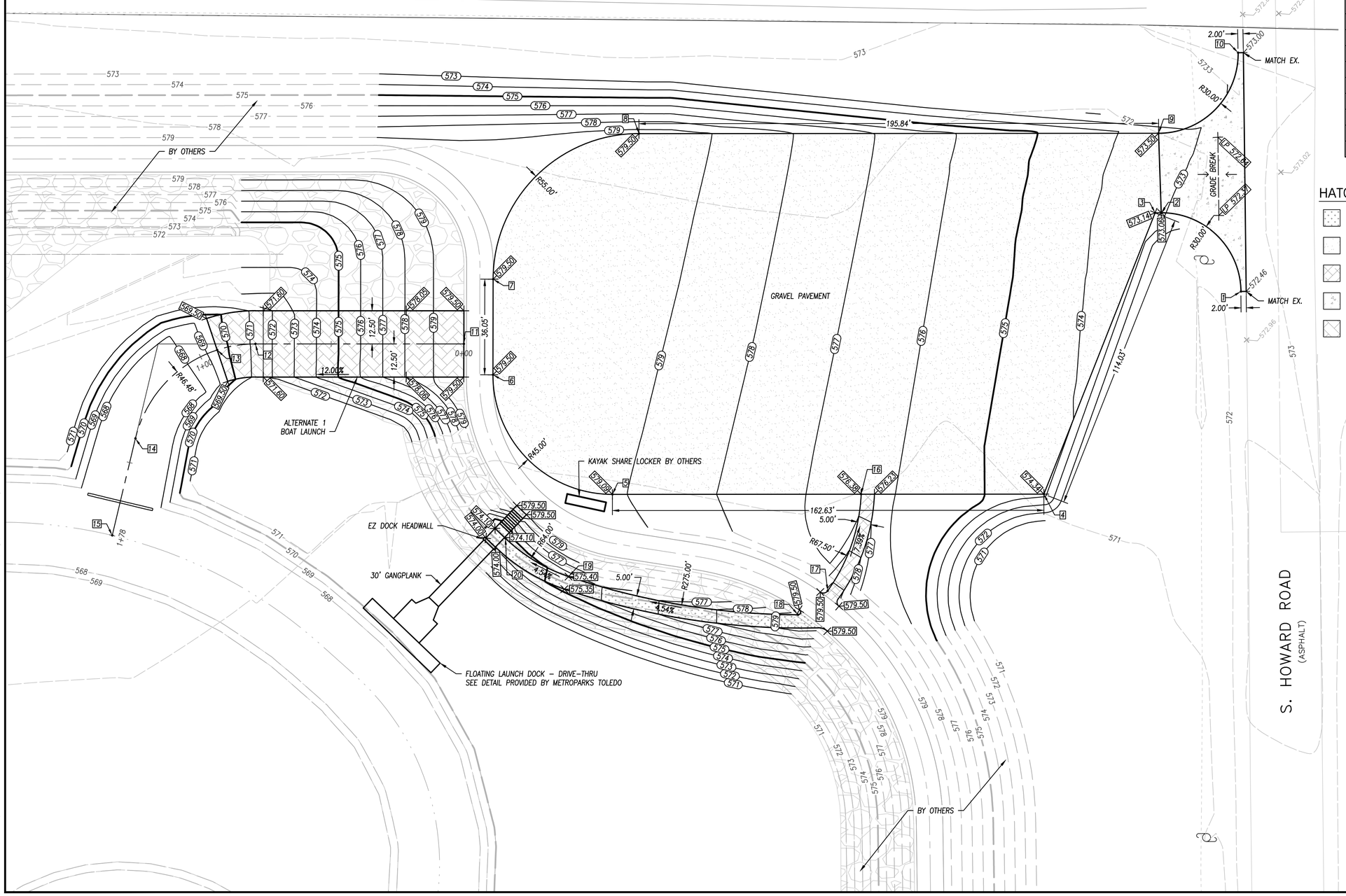

HATCH LEGEND

- CONCRETE WALK
- GRAVEL PAVEMENT
- GRAVEL PATH
- CONCRETE PAVEMENT
- BOAT LAUNCH

SCALE: 1" = 20'

STATE OF OHIO
JOSHUA JAMES O'NEIL
E-69263
REGISTERED
PROFESSIONAL ENGINEER
August 25, 2021

NO	REVISION	DATE
1		
2		
3		
4		
5		
6		
7		
8		
9		

DGL CONSULTING ENGINEERS, LLC
3455 BRIARFIELD BLVD. SUITE E
MAUMEE, OH 43537
PHONE: 419.535.1015
www.dgl-ltd.com

METROPARKS TOLEDO HOWARD MARSH

BOARDWALK & BOAT LAUNCH
611 SOUTH HOWARD ROAD
CURTICE, OH 43412
LUCAS COUNTY

PARKING LOT & BOAT LAUNCH

FILE:	21098 CD.dwg
JOB NO.:	21098
DRAWN BY:	EAH
ISSUED:	JULY 30, 2021

C2

PLOTTED: Aug 25, 2021 – 7:34am
DRAWING: M:\21098 (Metroparks Toledo – Howard Marsh Boardwalk & Boat Launch Details)\CIVIL\Dwg\21098 CD.dwg: C02 PARKING HOWARD

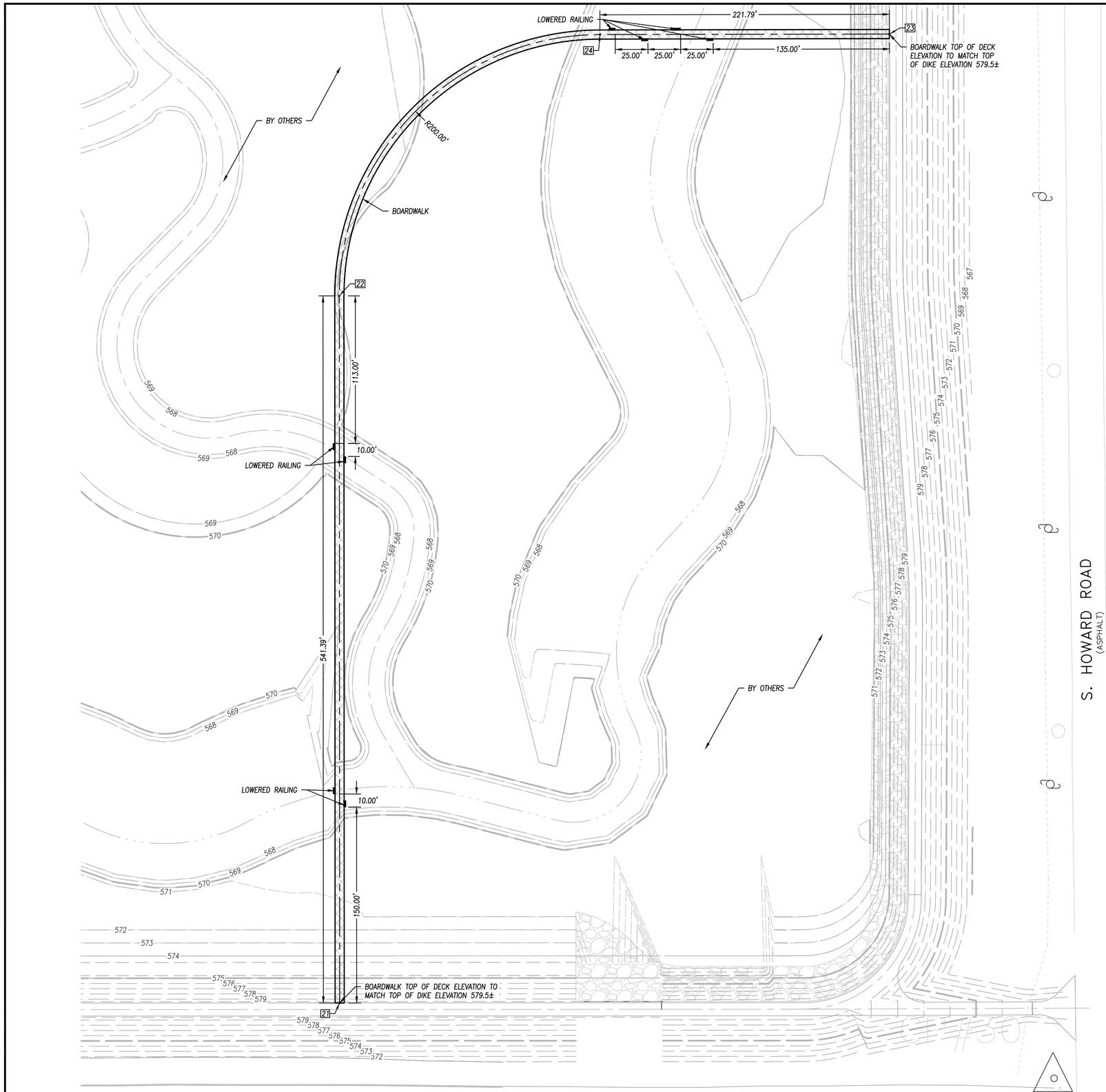

POINT TABLE			
POINT #	NORTHING	EASTING	DESCRIPTION
21	722227.076	1756547.650	CL BOARDWALK
22	722768.470	1756547.394	CL BOARDWALK
23	722968.956	1756968.826	CL BOARDWALK
24	722968.564	1756747.040	CL BOARDWALK

N

0 40 80
SCALE: 1" = 40'

STATE OF OHIO
JOSHUA JAMES O'NEIL
E-69263
REGISTERED
PROFESSIONAL ENGINEER
August 25, 2021

NO	REVISION	DATE
1		
2		
3		
4		
5		
6		
7		
8		
9		

DGL CONSULTING ENGINEERS, LLC
3455 BRIARFIELD BLVD, SUITE E
MAUMEE, OH 43537
PHONE: 419.535.1015
www.dgl-ltd.com

METROPARKS TOLEDO HOWARD MARSH

BOARDWALK & BOAT LAUNCH
611 SOUTH HOWARD ROAD
CURTICE, OH 43412
LUCAS COUNTY

BOARDWALK LAYOUT

FILE:	21098 CD.dwg
JOB NO.:	21098
DRAWN BY:	EAH
ISSUED:	JULY 30, 2021

C3

PLOTTED: Aug 25, 2021 – 7:35am
DRAWING: M:\21098 (Metroparks Toledo – Howard Marsh Boardwalk & Boat Launch Details)\CIVIL\Dwg\21098 CD.dwg; C03 BOARDWALK HOWARD

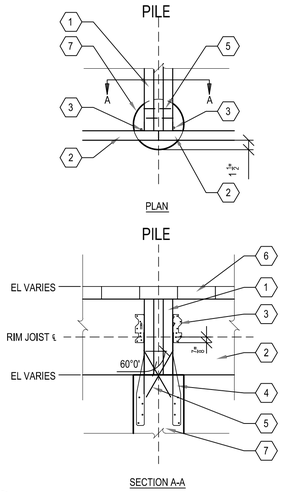

1. TRIPLE 2X12 BEAM
2. 2X12 RIM JOIST
3. SIMPSON FRAMING ANGLE A35 WITH A TYPE 4 CONNECTION
4. SIMPSON TWIST STRAP, HTSQ16
5. TWO TOE SCREWS $\frac{3}{8}$"DX8.5" AT 60° ANGLE
6. 2x6 DECKING
7. 8" DIA. TIMBER PILE

NOTES:
1. RAILING AND CURB NOT SHOWN, SEE SHEET C4 FOR RAILING DETAILS AND SHEET C3 FOR RAILING LAYOUT.
2. INSTALL ALL SIMPSON CONNECTORS PER MANUFACTURER REQUIREMENTS.

1 C4 BOARDWALK PILE CONNECTION, TYP.
PLAN AND SECTION — 1"=1'-0"

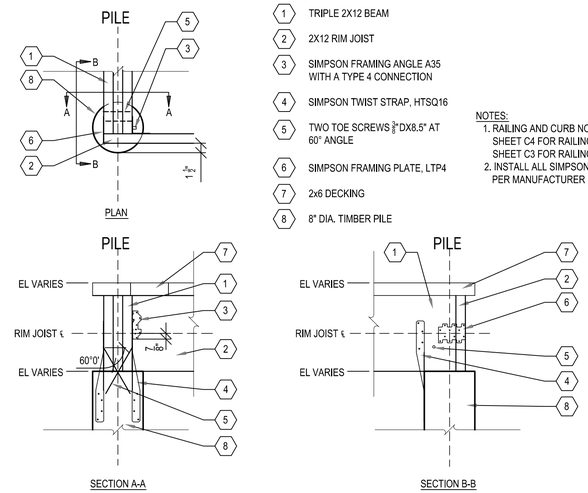

1. TRIPLE 2X12 BEAM
2. 2X12 RIM JOIST
3. SIMPSON FRAMING ANGLE A35 WITH A TYPE 4 CONNECTION
4. SIMPSON TWIST STRAP, HTSQ16
5. TWO TOE SCREWS $\frac{3}{8}$"DX8.5" AT 60° ANGLE
6. SIMPSON FRAMING PLATE, LTP4
7. 2x6 DECKING
8. 8" DIA. TIMBER PILE

NOTES:
1. RAILING AND CURB NOT SHOWN, SEE SHEET C4 FOR RAILING DETAILS AND SHEET C3 FOR RAILING LAYOUT.
2. INSTALL ALL SIMPSON CONNECTORS PER MANUFACTURER REQUIREMENTS.

2 C4 BOARDWALK PILE CONNECTION AT PLATFORM CORNERS, TYP.
PLAN AND SECTION — 1"=1'-0"

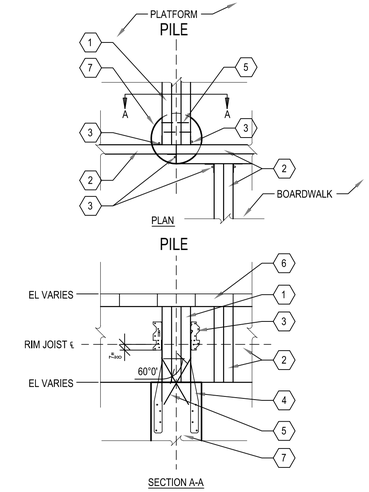

1. TRIPLE 2X12 BEAM
2. 2X12 RIM JOIST
3. SIMPSON FRAMING ANGLE A35 WITH A TYPE 4 CONNECTION
4. SIMPSON TWIST STRAP, HTSQ16
5. TWO TOE SCREWS $\frac{3}{8}$"DX8.5" AT 60° ANGLE
6. 2x6 DECKING
7. 8" DIA. TIMBER PILE

NOTES:
1. RAILING AND CURB NOT SHOWN, SEE SHEET C4 FOR RAILING DETAILS AND SHEET C3 FOR RAILING LAYOUT.
2. INSTALL ALL SIMPSON CONNECTORS PER MANUFACTURER REQUIREMENTS.

3 C4 BOARKWALK PILE CONNECTION AT BOARDWALK AND PLATFORM INTERFACE
PLAN AND SECTION — 1"=1'-0"

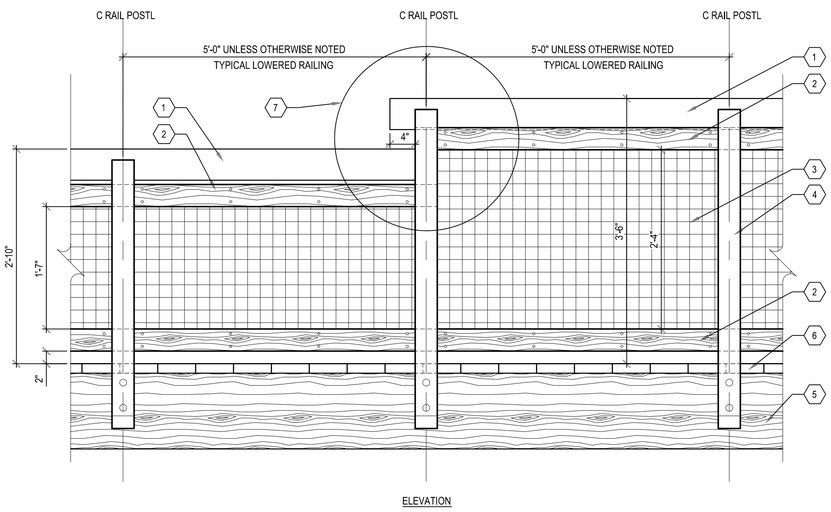

1. 2X8 TOP RAIL (ANGLED)
2. 2X4 TIMBER BOARD
3. 2X2 WELDED WIRE MESH - 12.5 GAUGE, VINYL COATED. 36" AND 24" WIDTH TYP.
4. 4X4 RAIL POST
5. 2X12 RIM JOIST
6. 2x6 DECKING
7. HIGH RAIL LOW RAIL CONNECTION (6 / C4)

NOTE:
1. LOWERED RAILING ONLY ON BOARDWALK PLATFORMS.
2. TYPICAL RAIL SPACING ON BOARDWALK IS 5'-0" ON CENTER.

4 C4 BOARDWALK RAILING, TYP.
ELEVATION AND SECTION — 1"=1'-0"

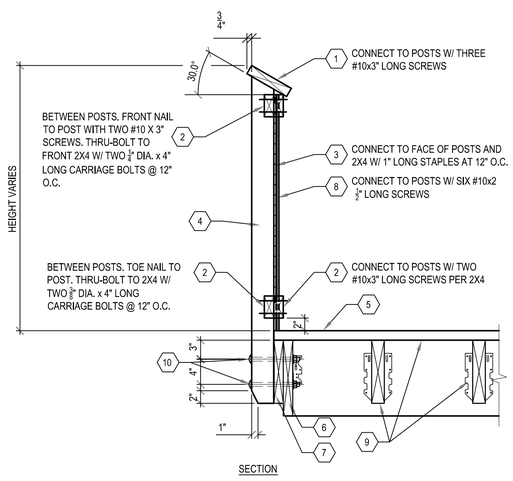

1. CONNECT TO POSTS W/ THREE #10x3" LONG SCREWS
2. CONNECT TO POSTS W/ TWO #10x3" LONG SCREWS PER 2X4
3. CONNECT TO FACE OF POSTS AND 2X4 W/ 1" LONG STAPLES AT 12" O.C.
4. CONNECT TO POSTS W/ SIX #10x2 $\frac{1}{2}$" LONG SCREWS
5. 2X8 TOP RAIL (ANGLED)
6. 2X4 TIMBER BOARD
7. 2X2 WELDED WIRE MESH - 12.5 GAUGE, VINYL COATED
8. 4X4 RAIL POST
9. 2X6 DECKING
10. 2X12 RIM JOIST
11. 2WX10HX4L TIMBER BLOCK AT RAIL POST
12. 1X4 TRIM STRIP AT RAIL POSTS
13. BOARDWALK. SEE SHEET C3 FOR DETAILS.
14. $\frac{3}{8}$" DIAMETER CARRIAGE BOLTS WITH NUTS AND WASHERS. 2 PER POST

BOARDWALK NOTES:
1. BOARDWALK TO BE PRESSURE TREATED TIMBER FRAME AND DECKING SUPPORTED ON ROUND TIMBER PILE FOUNDATIONS.
2. BOARDWALK DESIGNED FOR 100 PSF AASHTO PEDESTRIAN LIVE LOAD AND 30 PSF DEAD LOAD.
3. CENTERLINE ALIGNMENT SHOWN FOR LAYOUT PURPOSES ONLY. RADII SHOWN ARE EQUIVALENCIES. ACTUAL BOARDWALK TO BE CONSTRUCTED OF STRAIGHT SEGMENTS TO APPROXIMATE THE RADIAL SECTIONS.
4. PILE PAIRS (BENTS) TO SUPPORT TRIPLE 2X12 TREATED TIMBER BEAMS. MAXIMUM CENTER TO CENTER SPACING BETWEEN PILE BENTS SHALL BE 10'-0". PILE BENTS SHALL BE CONSTRUCTED PERPENDICULAR TO THE BOARDWALK CENTER LINE ALIGNMENT.
5. BOARDWALK FRAMING TO BE 2X10 TREATED TIMBER JOISTS SPACED 16" ON CENTER. JOISTS ARE TO BE SUPPORTED FROM TRIPLE 2X12 BEAMS WITH GALVANIZED STEEL JOIST HANGERS. JOIST HANGERS TO BE RATED FOR HEAVY DUTY SERVICE, SIMPSON STRONG-TIE HUS SERIES OR APPROVED EQUAL. MAXIMUM SPAN LENGTH OF 2X10 JOIST TO BE 10'-0". EXTERIOR RIM (EDGE) JOISTS TO BE 2X12 TREATED TIMBER, CONNECTED TO OUTER EDGE OF TRIPLE 2X12 BEAM.
6. BOARDWALK TO HAVE HANDRAILS OR CURB, HEIGHT AND LOCATIONS AS NOTED ON PLANS.
7. TIMBER FOR FRAMING MEMBERS TO BE SOUTHERN YELLOW PINE, No. 1 SELECT STRUCTURAL, PRESSURE TREATED ACCORDING TO AWPA STANDARD U1, RATED FOR GROUND CONTACT.
8. TIMBER FOR DECKING TO BE SOUTHERN YELLOW PINE, No. 1 OR No. 1 PRIME, PRESSURE TREATED FOR ABOVE GROUND APPLICATIONS, AND VISUALLY INSPECTED TO BE FREE OF ALL DEFECTS. DECKING TO BE PLACED WITH ANNULAR RINGS FACING DOWN (BARK SIDE UP).
9. DECKING BOARDS SHALL FIRMLY ABUT ADJACENT DECK BOARDS. DO NOT PLACE GAPS BETWEEN BOARDS.
10. DECKING SHALL BE CONNECTED TO FRAMING WITH #10X3" STAINLESS STEEL DECK SCREWS. DECKING SHALL BE ATTACHED TO FRAMING MEMBERS (JOISTS) WITH A MINIMUM OF TWO SCREWS PER DECK BOARD PER JOIST FOR INTERNAL JOISTS (2X10'S) AND A MINIMUM OF THREE SCREWS PER DECK BOARD PER JOIST FOR EXTERIOR (RIM/EDGE) JOISTS.
11. BOARDWALK TO CONTAIN CONTINUOUS 6X6 TIMBER CURB EXCEPT AT RAILING LOCATIONS.
12. ALL SIMPSON CONNECTORS TO COMPLY WITH AWPA UC4A.

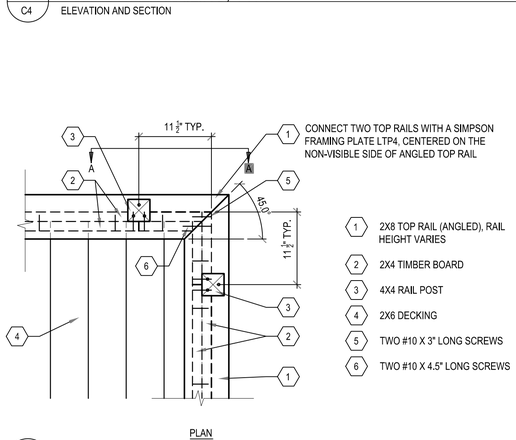

1. CONNECT TWO TOP RAILS WITH A SIMPSON FRAMING PLATE LTP4, CENTERED ON THE NON-VISIBLE SIDE OF ANGLED TOP RAIL
2. 2X8 TOP RAIL (ANGLED), RAIL HEIGHT VARIES
3. 2X4 TIMBER BOARD
4. 4X4 RAIL POST
5. 2X6 DECKING
6. TWO #10 X 3" LONG SCREWS
7. TWO #10 X 4.5" LONG SCREWS

5 C4 BOARDWALK PLATFORM RAILING AT CORNERS, TYP.
PLAN AND SECTION — 1"=1'-0"

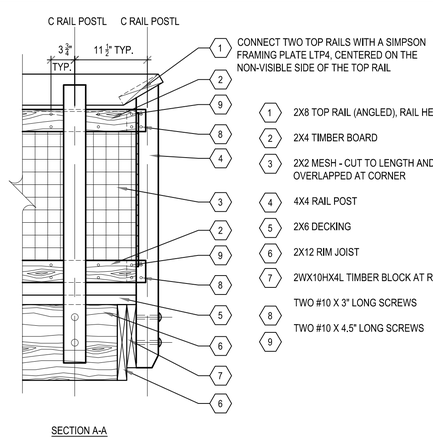

1. CONNECT TWO TOP RAILS WITH A SIMPSON FRAMING PLATE LTP4, CENTERED ON THE NON-VISIBLE SIDE OF THE TOP RAIL
2. 2X8 TOP RAIL (ANGLED), RAIL HEIGHT VARIES
3. 2X4 TIMBER BOARD
4. 2X2 MESH - CUT TO LENGTH AND OVERLAPPED AT CORNER
5. 4X4 RAIL POST
6. 2X6 DECKING
7. 2X12 RIM JOIST
8. 2WX10HX4L TIMBER BLOCK AT RAIL POST
9. TWO #10 X 3" LONG SCREWS
10. TWO #10 X 4.5" LONG SCREWS

6 C4 BOARDWALK RAILING - HIGH RAIL LOW RAIL CONNECTION
DETAIL — 1"=1'-0"

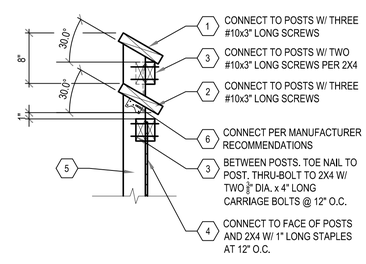

1. CONNECT TO POSTS W/ THREE #10x3" LONG SCREWS
2. CONNECT TO POSTS W/ TWO #10x3" LONG SCREWS PER 2X4
3. CONNECT TO POSTS W/ THREE #10x3" LONG SCREWS
4. CONNECT PER MANUFACTURER RECOMMENDATIONS
5. BETWEEN POSTS. TOE NAIL TO POST, THRU-BOLT TO 2X4 W/ TWO $\frac{3}{8}$" DIA. x 4" LONG CARRIAGE BOLTS @ 12" O.C.
6. CONNECT TO FACE OF POSTS AND 2X4 W/ 1" LONG STAPLES AT 12" O.C.
1. 2X8 TOP RAIL (ANGLED)
2. 2X8 LOW RAIL (ANGLED)
3. 2X4 TIMBER BOARD
4. 2X2 WIRE MESH
5. 4X4 RAIL POST
6. SIMPSON FRAMING ANGLE A34

7 C4 RAIL POST SECTION
SECTION — 1"=1'-0"

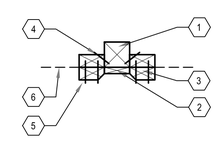

1. 4X4 RAIL POST
2. 1X4 TRIM STROP AT RAIL POST WITH 2" SCREWS @ 12" O.C. VERTICAL
3. 2X4 TIMBER BOARD WITH BEVELED EDGE AT 60°
4. TOE NAIL
5. TWO #10X3" SCREWS
6. WELDED WIRE MESH

NO	REVISION	DATE
1		
2		
3		
4		
5		
6		
7		
8		
9		

METROPARKS TOLEDO
HOWARD MARSH
BOARDWALK & BOAT LAUNCH
611 SOUTH HOWARD ROAD
CURTICE, OH 43412
LUCAS COUNTY

BOARDWALK DETAILS

FILE:	21098 CD.dwg
JOB NO.:	21098
DRAWN BY:	EAH
ISSUED:	JULY 30, 2021

C4

PLOTTED: Aug 25, 2021 – 7:35am
DRAWING: M:\21098 (Metroparks Toledo – Howard Marsh Boardwalk & Boat Launch Details)\CIVIL\Dwg\21098 CD.dwg: C04 DETAILS HOWARD

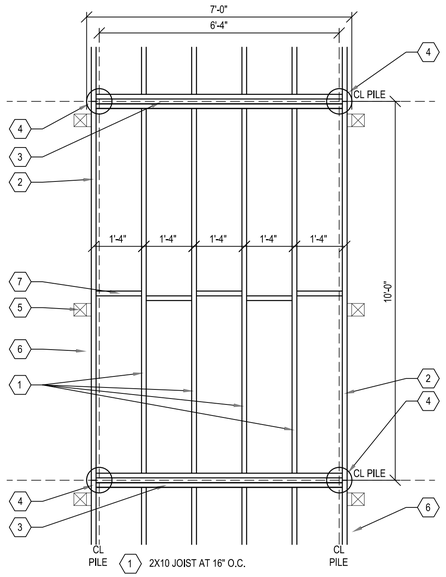

1. 2X10 JOIST AT 16" O.C.
2. 2X12 RIM JOIST
3. TRIPLE 2X12 BEAM
4. 8" DIA. TIMBER PILE
5. BOARDWALK RAILING, TYP. (4, 5, 6 / C4)
6. OUTER EDGE OF DECKING
7. 2X6 CROSS BRACING AT MIDSPAN, CENTERED ON JOIST, CONNECTED WITH SIMPSON JOIST HANGERS LUS28SS

5 / C3 TYP. BOARDWALK FRAMING PLAN

DETAIL — 1/2" = 1'

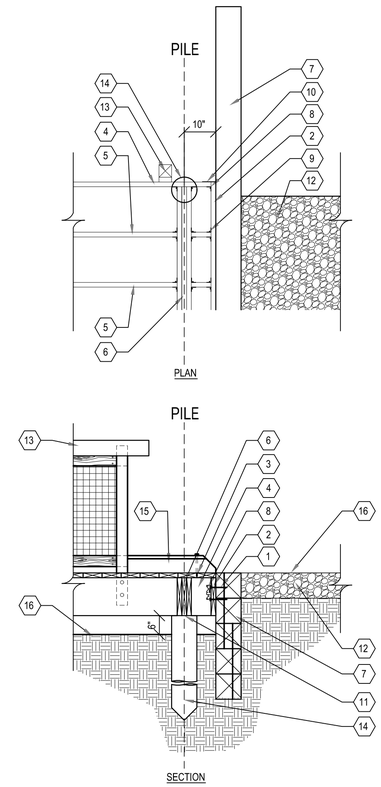

1. ATTACH HEADER TO WALL WITH TWO $\frac{3}{4}$" DIA. X 5" LONG GALVANIZED LAG BOLTS WITH WASHERS AT 2'-0" O.C.
2. 2X12 HEADER JOIST
3. 2X6 DECKING - TWO 3" LONG SCREWS PER JOIST
4. 2X12 RIM JOIST
5. 2X10 JOIST
6. TRIPLE 2X12 BEAM
7. 5 - 8X8 TIMBER BACKWALL
8. SIMPSON FRAMING ANGLE A35 WITH A TYPE 4 CONNECTION
9. SIMPSON JOIST HANGER, LUC210SS
10. SIMPSON FRAMING PLATE, LTP4, CENTERED HORIZONTALLY
11. BOARDWALK PILE CONNECTION, TYP. (1 / C4)
12. AGGREGATE PATHWAY
13. BOARDWALK RAILING, TYP. (4, 5, 6 / C4)
14. 8" DIA. TIMBER PILE
15. TIMBER CURB (4 / C5)
16. FINISH GRADE

NOTES:
1. TIMBER WALLS TO UTILIZE 8X8 TREATED TIMBERS, 4' MINIMUM LENGTH, STAGGERED JOINTS, 4' MINIMUM LAP AT JOINTS, JOINTS SHALL NOT ALIGN VERTICALLY IN ANY COURSE.
2. NAIL/SPIKE TIMBERS TOGETHER WITH 12" GALVANIZED SPIRAL SHANK SPIKES AT 18" O.C.
3. BORE $\frac{1}{2}$" DIA. HOLE THROUGH ALL WALL MEMBERS AND ANCHOR WALL IN PLACE WITH #4 X 24" LONG EPOXY COATED DEFORMED DARTS 9" MAXIMUM FROM ENDS, AND AT 36" O.C.
4. REFER TO BOARDWALK NOTES ON SHEET C4

3 / C3 TIMBER BACKWALL

DETAIL — 1/2" = 1'

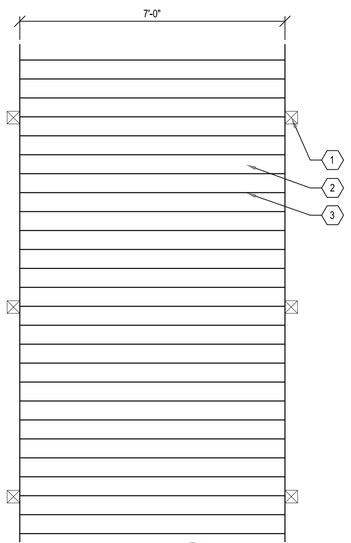

1. BOARDWALK RAILING, TYP. (4, 5, 6 / C4)
2. 2X6 DECKING - TWO 3" LONG SCREWS PER JOIST
3. $\frac{3}{8}$" GAP BETWEEN DECK BOARDS TYP.

GENERAL NOTES:
1. RIP/TAPER DECK BOARDS AT BEAM LOCATIONS AS REQUIRED, 3.5" MINIMUM BOARD WIDTH. MITER ALL RADIAL CUTS TO MATCH ORIGINAL CONDITION.
2. EACH DECK BOARD SHALL BE ONE PIECE.
3. REFER TO BOARDWALK NOTES ON SHEET C4

2 / C3 TYP. BOARDWALK LAYOUT PLAN

DETAIL — 1/2" = 1'

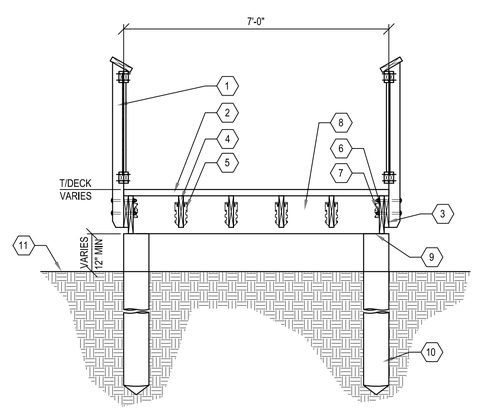

1. BOARDWALK RAILING - HEIGHT VARIES, AS INDICATED ON PLANS (4 / C4)
2. 2X6 DECKING
3. 2"WX10"HX4"L TIMBER BLOCK AT RAIL POST
4. 2X10 JOIST
5. SIMPSON JOIST HANGERS, LUS210SS
6. 2X12 RIM JOIST
7. SIMPSON FRAMING ANGLE, A35SS
8. TRIPLE 2X12 BEAM
9. PILE CONNECTION, VARIES (1, 2, 3 / C4)
10. 8" DIAMETER PRESSURE TREATED TIMBER PILE
11. FINISH GRADE

NOTES:
1. DRIVEN PRESSURE TREATED TIMBER PILES PER ASTM D25 WITH A MINIMUM BEARING CAPACITY OF 10 KIPS PER PILE AND 4 FOOT MINIMUM PENETRATION INTO STIFF CLAY SUBSOILS AS DETERMINED BY SOIL BLOW COUNTS.
3. REFER TO BOARDWALK NOTES ON SHEET C4

6 / C3 BOARDWALK & PILES TYP.

SECTION — 1/2" = 1'

N

0 40 80
SCALE: 1" = 40'

NO	REVISION	DATE
1		
2		
3		
4		
5		
6		
7		
8		
9		

METROPARKS TOLEDO HOWARD MARSH

BOARDWALK & BOAT LAUNCH
611 SOUTH HOWARD ROAD
CURTICE, OH 43412
LUCAS COUNTY

BOARDWALK DETAILS

FILE:	21098 CD.dwg
JOB NO.:	21098
DRAWN BY:	EAH
ISSUED:	JULY 30, 2021

C5

PLOTTED: Aug 25, 2021 – 7:35am
DRAWING: M:\21098 (Metroparks Toledo – Howard Marsh Boardwalk & Boat Launch Details)\CIVIL\Dwg\21098 CD.dwg: C05 DETAILS HOWARD

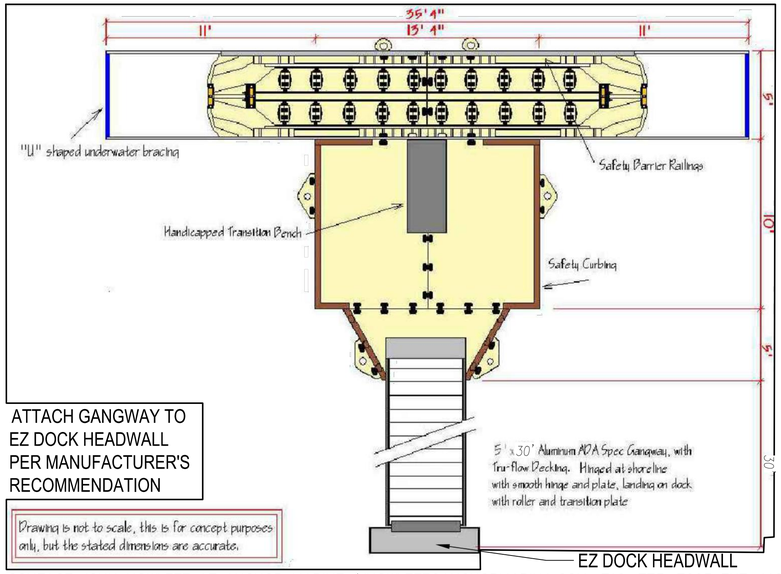

CONTACT JOHN HOWLETT AT ANCHOR MARINE (JHOWLETT@ANCHORMARINA.COM, 716–773–7063 EXT. 112) FOR PRICING INFORMATION. REFERENCE PROJECT EZD–OH–1601.

1 C3.6 FLOATING LAUNCH DOCK - DRIVE-THRU
PLAN 1"=1'-0"

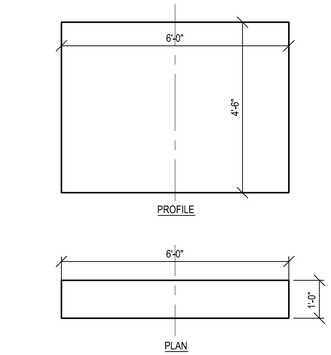

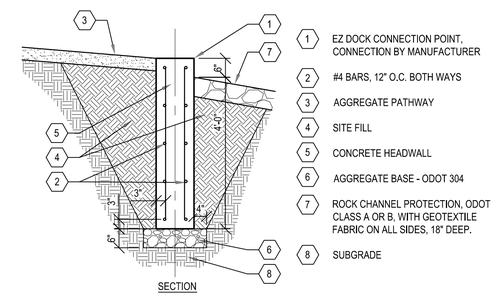

3 C3.6 EZ DOCK HEADWALL
DETAIL 1/2" = 1'

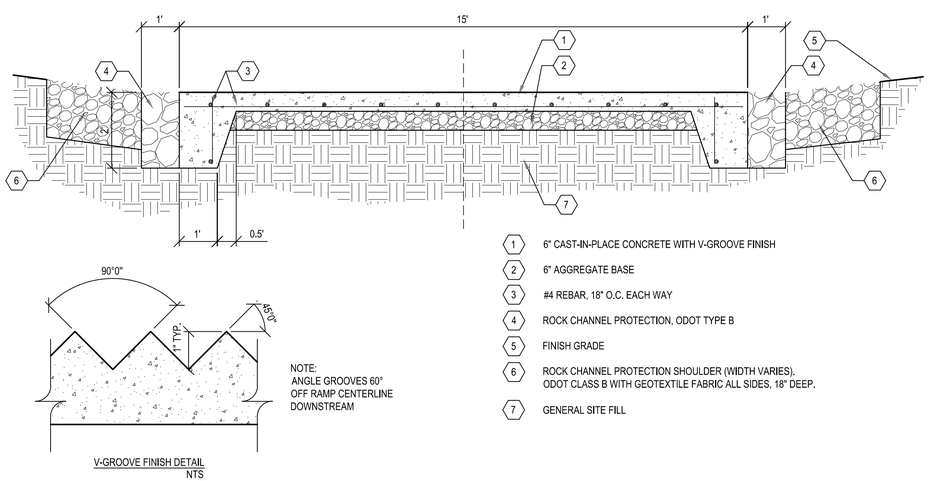

1 C5 BOAT LAUNCH CROSS SECTION, TYP. - ALTERNATE 1
SECTION 1/2" = 1'-0"

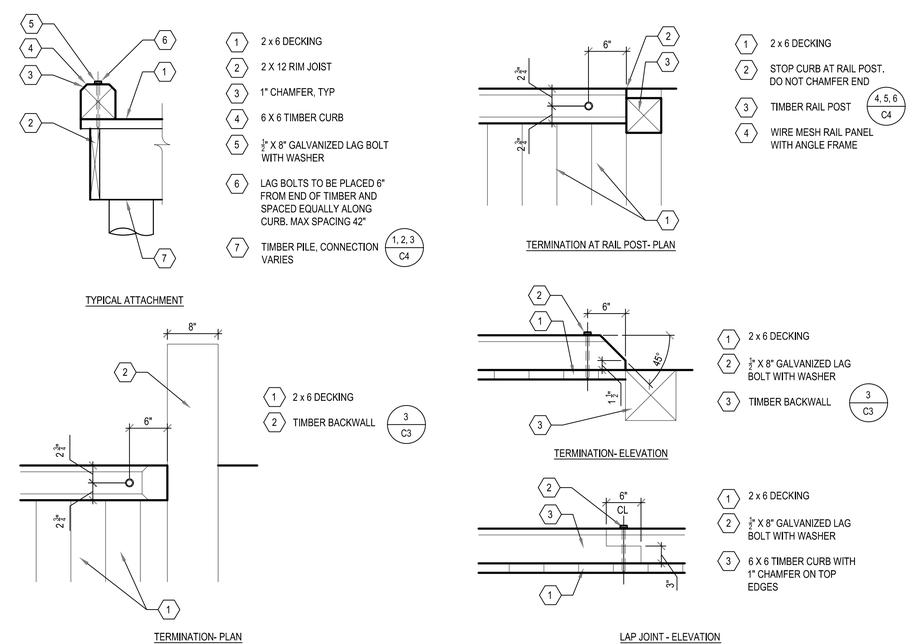

4 C5 TIMBER CURB
PLAN 1" = 1"

NO	REVISION	DATE
1		
2		
3		
4		
5		
6		
7		
8		
9		

METROPARKS TOLEDO
HOWARD MARSH
BOARDWALK & BOAT LAUNCH
611 SOUTH HOWARD ROAD
CURTICE, OH 43412
LUCAS COUNTY

BOAT LAUNCH DETAILS

FILE:	21098 CD.dwg
JOB NO.:	21098
DRAWN BY:	EAH
ISSUED:	JULY 30, 2021

C6

PLOTTED: Aug 25, 2021 – 7:35am
DRAWING: M:\21098 (Metroparks Toledo – Howard Marsh Boardwalk & Boat Launch Details)\CIVIL\Dwg\21098 CD.dwg: C06 DETAILS HOWARD