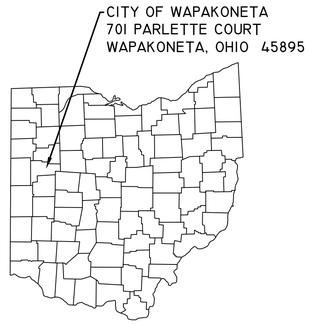

CITY OF WAPAKONETA, OHIO

HARDIN PIKE FORCE MAIN REPLACEMENT

2020

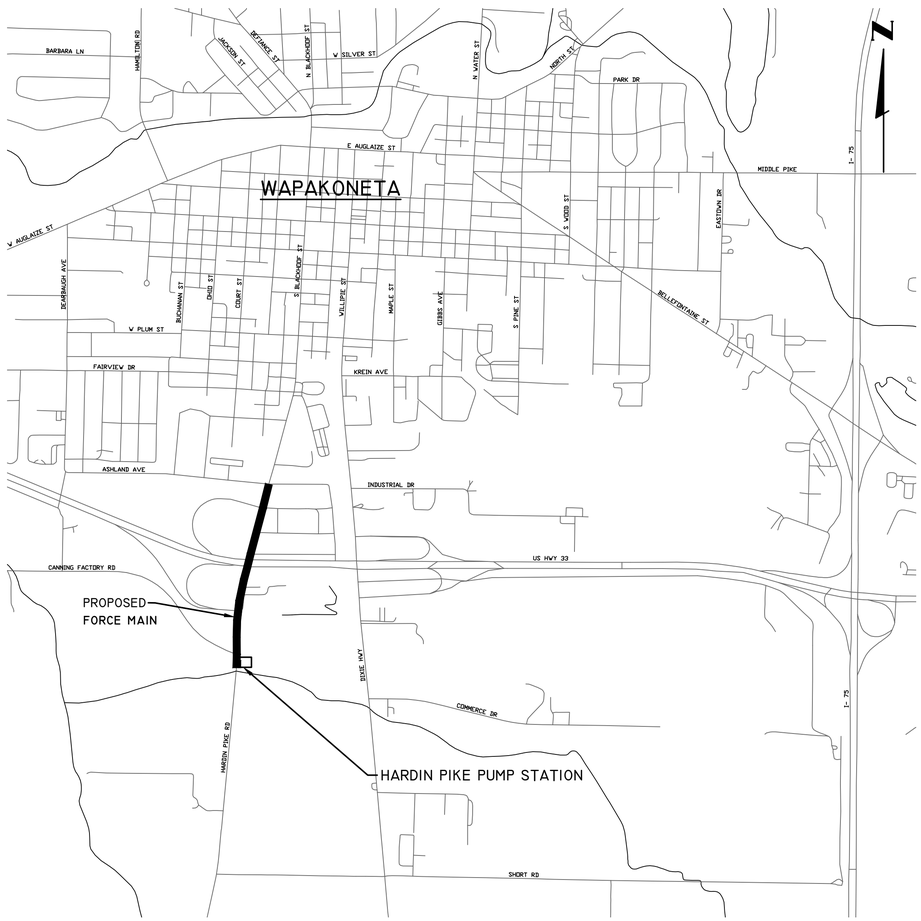

LOCATION MAP

0 500 1000 2000
SCALE IN FEET

STANDARD CONSTRUCTION DRAWINGS		ODOT STANDARD CONSTRUCTION DRAWINGS
NONE REQUIRED		NONE
		ODOT SUPPLEMENTAL SPECIFICATIONS
		NONE

2019 SPECIFICATIONS

THE CONSTRUCTION STANDARDS AND DRAWINGS OF THE CITY OF WAPAKONETA AND THE CONTRACT DOCUMENTS FOR THIS PROJECT, AND THE STANDARD SPECIFICATIONS OF THE STATE OF OHIO DEPARTMENT OF TRANSPORTATION, INCLUDING CHANGES AND GENERAL NOTES LISTED IN THE PLAN, SHALL GOVERN THIS IMPROVEMENT.

PROJECT DESCRIPTION

THIS PROJECT CONSISTS OF THE INSTALLATION OF MODIFICATIONS TO A PUMP STATION WITH A 16" FORCEMAIN.

EARTH DISTURBED AREAS

PROJECT EARTH DISTURBED AREA	= 0.21 ACRES
ESTIMATED CONTRACTOR EARTH DISTURBED AREA	= 0.05 ACRES (ALLOWANCE)
NOTICE OF INTENT (NOI) EARTH DISTURBED AREA	= 0.26 ACRES

* THESE PLANS WERE ORIGINALLY SEALED BY THE ENGINEER ON JULY 10, 2020. THE OWNER APPROVED THE PLANS ON THE DATES SHOWN. MINOR CHANGES TO THE PLANS WERE MADE SUBSEQUENT TO THE APPROVAL FOR ODOT DISTRICT 7 IN JANUARY AND FEBRUARY OF 2021. THE ENGINEER HAS RESEALED THE REVISED VERSION ON THE DATES SHOWN. THE OWNER HAS OPTED NOT TO REQUIRE NEW APPROVALS.

STATE OF OHIO
KATHRYN A. WAMBO
E-76329
REGISTERED PROFESSIONAL ENGINEER

Kathryn A. Wambo
4/1/2021

STATE OF OHIO
THEODORE A. BENNETT
E-70768
REGISTERED PROFESSIONAL ENGINEER

Theodore A Bennett
4/1/2021

* APPROVED BY:

Floyd T. Gregg FLOYD T. GREGG	SAFETY SERVICE DIRECTOR	7-10-2020 DATE
Justin Waid JUSTIN WAID	WWTP SUPERINTENDENT	7-10-2020 DATE
Mary A. Ruck MARY A. RUCK	ZONING & ENGINEERING SUPERINTENDENT	7-8-2020 DATE

ENGINEER:
JONES & HENRY ENGINEERS, LTD.
3103 EXECUTIVE PARKWAY
SUITE 300
TOLEDO, OHIO 43606

OWNER:
CITY OF WAPAKONETA
701 PARLETTE COURT
P.O. BOX 269
WAPAKONETA, OHIO 45895

NOTE:
ROOF DRAINS, FOUNDATION DRAINS, AND ALL OTHER CLEAN WATER CONNECTIONS TO THE SANITARY SEWER ARE PROHIBITED.

Ohio Utilities Protection Service
Call 811 before you dig

Jones & Henry Engineers, Ltd.
Fluid thinking®.
www.JHeng.com

STATUS: ISSUED FOR BID
DATE: APRIL 2021

TOL-750206\COVER
JJ/2020-05-14 AM
4/1/2021 10:55 AM

STRUCTURAL LEGEND

- EXISTING STRUCTURE
- EXISTING STRUCTURE TO BE REMOVED
- NEW CONCRETE STRUCTURE
- NEW BLOCK WALL
- NEW BRICK WALL

PIPING AND EQUIPMENT LEGEND

- EXISTING PIPING
- EXISTING PIPING OR EQUIPMENT TO BE REMOVED (IF YARD PIPING, ABANDON AND REMOVE AS REQUIRED)
- EXISTING PIPING OR EQUIPMENT TO BE RELOCATED
- NEW PIPING

8/12 = NUMBER OF SECTION / SHEET NUMBER ON WHICH SECTION IS SHOWN

SECTION 3/4 = NUMBER OF SECTION / SHEET NUMBER ON WHICH SECTION IS CUT

DELINEATION OF SECTIONS

(SECTIONS LETTERED ARE SHOWN ON SAME SHEET)

A = ELEVATION VIEW

5/7 = NUMBER OF DETAIL IN SECTION / SHEET NUMBER ON WHICH DETAIL IS SHOWN

6/7 = NUMBER OF DETAIL IN PLAN / SHEET NUMBER ON WHICH DETAIL IS SHOWN

DETAIL 5/9 = NUMBER OF DETAIL / SHEET NUMBER ON WHICH DETAIL IS TAKEN

DELINEATION OF BLOW - UP DETAILS

(DETAILS LETTERED ARE SHOWN ON SAME SHEET)

ODOT DISTRICT 7 PLAN NOTES:

a. NO STOCKPILING OF MATERIALS IN STATE RIGHT OF WAY.
b. NO STEEL TRACKED EQUIPMENT SHALL BE ALLOWED ON A STATE ROUTE.
c. NO CHANGES TO THE WORK SHOWN ON THE PLANS WITHIN THE STATE RIGHT OF WAY ARE TO BE MADE WITHOUT ODOT APPROVAL.
d. NO PROJECT IDENTIFICATION SIGNS ARE TO BE PLACED IN STATE RIGHT OF WAY.
e. ODOT SHALL BE INVITED TO THE PROJECT PRECONSTRUCTION MEETING AND BE PROVIDED WITH CONTACT INFORMATION FOR THE CONTRACTOR AND THE CITY OF WAPAKONETA.
f. ANY EXISTING PIPE, FIELD TILES, UNDERDRAINS, STORM DRAINS, ETC. ENCOUNTERED WITHIN ODOT RIGHT OF WAY SHALL BE REPLACED IN KIND PER ODOT STANDARDS UNLESS THE PIPE MATERIAL IS CLAY IN WHICH SDR-26 PVC SHALL BE USED AS A REPLACEMENT.
g. DISPOSING OF EXCESS OR UNSUITABLE EXCAVATED MATERIAL IN WETLANDS OR FLOODPLAINS, EVEN WITH PROPERTY OWNER'S PERMISSION, IS PROHIBITED.
h. ANY SIGN REMOVED/REPLACED IN ODOT RIGHT OF WAY SHALL BE DETERMINED BY ODOT.
i. IT IS THE CONTRACTOR'S SOLE RESPONSIBILITY TO ENSURE THE GRASS IS ESTABLISHED TO THE SATISFACTION OF ODOT WITHIN STATE RIGHT OF WAY WHICH MAY REQUIRE ADDITIONAL WATERING, FERTILIZING, RESEEDING AND MULCHING. THE CONTRACTOR SHALL BE RESPONSIBLE FOR REGRADING AND RESEEDING ANY AREAS THAT HAVE ERODED OR AREAS THAT NEW GRASS DID NOT GERMINATE UNTIL THE ENTIRE AREA IS STABILIZED, SHAPED AND DRAINED AS PER THE PLANS.
j. THE ODOT RIGHT OF WAY USE PERMITTEE IS RESPONSIBLE FOR ALL UTILITY RELOCATION REQUIRED ON THE PROJECT WITHIN STATE RIGHT OF WAY. ALL WORK REQUIRED FOR UTILITY RELOCATION WITHIN STATE RIGHT OF WAY SHALL BE COORDINATED BY THE PERMITTEE. THE PERMITTEE IS RESPONSIBLE TO ENSURE ALL REQUIRED RIGHT OF WAY USE PERMITS ARE OBTAINED AS NEEDED PRIOR TO THE BEGINNING OF ANY UTILITY RELOCATION WORK.
k. ALL STATE ROUTES AND ROADWAYS WITHIN THE WORK AREA OF THE PROJECT SHALL BE KEPT CLEAR OF MUD, DIRT AND DEBRIS AT ALL TIMES.
l. THE SEWER LINE SHALL BE STAKED AND VIDEOTAPED PRIOR TO THE START OF WORK WITH A COPY PROVIDED TO ODOT.
m. THE OWNER OF THE FACILITY SHALL NOT FINALIZE THE PROJECT UNTIL ODOT HAS COMPLETED ITS INSPECTIONS.
n. THE TERM "ENGINEER" REFERENCED IN THESE PLANS REFERS TO THE ENGINEER REPRESENTING THE CITY OF WAPAKONETTA.
o. NO OPEN TRENCH GREATER THAN 2 PIPE LENGTHS IS ALLOWED IN ODOT L/A R/W.

SHEET INDEX

1	G-1	GENERAL SUMMARY, LEGENDS AND INDEX
2	PS-1	SITE PLAN
3	R-1	REMOVALS PUMP STATION PLANS AND SECTIONS
4	PE-1	PIPING AND EQUIPMENT PUMP STATION PLANS AND SECTIONS
5	FM-0.1	FORCE MAIN DETAILS
6	FM-0.2	FORCE MAIN DETAILS
7	FM-1.1	HARDIN PIKE SANITARY FORCE MAIN PLAN AND PROFILE STA. 0+00 TO 5+50
8	FM-1.2	HARDIN PIKE SANITARY FORCE MAIN PLAN AND PROFILE STA. 5+50 TO 11+00
9	FM-1.3	HARDIN PIKE SANITARY FORCE MAIN PLAN AND PROFILE STA. 11+00 TO 16+50
10	FM-1.4	HARDIN PIKE SANITARY FORCE MAIN PLAN AND PROFILE STA. 16+50 TO 22+00
11	FM-1.5	HARDIN PIKE SANITARY FORCE MAIN PLAN AND PROFILE STA. 22+00 TO 25+50
12	FM-1.6	HARDIN PIKE SANITARY FORCE MAIN PLAN AND PROFILE STA. 0+00 TO 1+50
13	EC-1	EROSION CONTROL DETAILS

Item No.	Plan Quantity	Contigency Quantity	Grand Total	Unit	Description	FM1.1	FM1.2	FM1.3	FM1.4	FM1.5	FM1.6
1	1	0	1	LS	Mobilization and Demobilization	0	0	0	0	0	0
2a	77	0	77	LF	16-inch Force Main, Type B	0	0	0	0	0	77
2b	1,845	0	1,845	LF	16-inch Force Main, Type C	454	384	261	489	236	21
2c	135	5	140	LF	16-inch Force Main, Type ODOT7	59	0	0	0	32	44
2d	577	10	587	LF	16-inch Force Main in 30-inch Bored Casing	0	173	310	61	33	0
2e	17	8	25	LF	Force Main Removed	0	0	0	0	10	7
2f	2	0	2	EA	Force Main Plug	0	0	0	0	1	1
2g	1	0	1	EA	Connection to Existing Force Main	0	0	0	0	1	0
3a	1	0	1	EA	Bypass Structure	0	0	0	0	0	1
3b	1	1	2	EA	Air Release Valve Manhole Structure	0	0	0	0	1	0
4a	131	20	151	SY	Flexible Pavement Trench Repair	50	0	0	0	55	26
4b	83	10	93	SY	Gravel Driveway Repair	0	0	0	0	0	83
5	1	0	1	LS	Video Recording of Zone of Influence	0	0	0	0	0	0
6	1	0	1	LS	Maintenance of Traffic	0	0	0	0	0	0
7	69	6	75	LF	Fence Modifications	0	0	0	0	0	69
8	1	0	1	LS	Pump Station Piping Modifications	0	0	0	0	0	0

TOPOGRAPHY LEGEND

TOPOGRAPHY LINES:

- CENTER LINE
- FENCE LINE
- PROPERTY LINE
- PERMANENT EASEMENT
- CONSTRUCTION EASEMENT
- SILT FENCE

UTILITY LINES:

- C — CABLE (UNDERGROUND)*
- CO15 — COMBINED SEWER
- E — ELECTRICAL (UNDERGROUND)*
- G4 — GAS LINE
- SA10 — SANITARY SEWER
- S — SIGNAL (UNDERGROUND)*
- ST18 — STORM SEWER
- T — TELEPHONE (UNDERGROUND)*
- W8 — WATER LINE
- ST54 — LARGE DIAMETER LINES (ANY TYPE)
- UTILITY LINE TO BE REMOVED
- UTILITY LINE TO BE ABANDONED
- PROPOSED WATER SERVICE (TRENCHLESS CONSTRUCTION)
- PROPOSED WATER

ALPHA DESIGNATION REFERS TO UTILITY TYPE, NUMERICAL DESIGNATION REFERS TO PIPE NOMINAL DIAMETER. LINES WITH NO NUMERICAL DESIGNATION ARE OF UNKNOWN SIZE.

* AERIAL LINES, IF SHOWN, ARE DESIGNATED WITH LOWER CASE LETTERS
** FOR ELLIPTICAL SEWERS, THE VERTICAL DIMENSION (RISE) IS CALLED OUT FIRST FOLLOWED BY THE HORIZONTAL DIMENSION (SPAN). EXAMPLE: 45X35 (RISE X SPAN) THE VERTICAL DIMENSION IS 45", THE HORIZONTAL DIMENSION IS 35".

SYMBOLS:

- MH — MANHOLE
- PP — POWER POLE OR TELEPHONE POLE
- Hold PP — POLE TO BE TEMPORARILY SUPPORTED AND PROTECTED BY CONTRACTOR
- LP — LIGHT POLE
- FH, YH — FIRE HYDRANT OR YARD HYDRANT
- VALVE
- CO — CLEAN OUT
- IP — IRON PIN (OR LABELED POST, MARKER ETC.)
- CB — CATCH BASIN
- FIRE HYDRANT TO BE REMOVED
- TREE TO BE REMOVED
- STUMP TO BE REMOVED
- TC - TOP OF CURB ELEVATION / G - GUTTER ELEVATION
- 713.31 — SPOT ELEVATION *POINT OF ELEVATION IS DECIMAL
- FORCE MAIN FLUSHING CONNECTION
- BORING B-2 — SOIL BORING
- WATER MAIN PLUG, SEE PLUG DETAIL ON SHEET MD-01. FOR PLUGS WITH "T/A" DESIGNATION SEE TERMINATION & ABANDONMENT DETAILS ON SHEET MD-01.
- 72 — CONTROL POINT
- 1031 — BENCHMARK
- ABANDON, WV, ABANDON, WV, ABANDON, W, ABANDON, UM — WATER VALVE MANHOLE OR BOX TO BE ABANDONED, SEE SPECIFICATIONS

STORM WATER POLLUTION PREVENTION

- RCE — ROADWAY CONSTRUCTION ENTRANCE
- IP — INLET PROTECTION
- SILT FENCE

NOTE: ACCURACY OF EXISTING ELEVATIONS AND DIMENSIONS IS NOT GUARANTEED. FIELD VERIFY BEFORE CONSTRUCTION.

CONTROL POINTS				
POINT #	RAW DESCRIPTION	ELEVATION	NORTHING	EASTING
50	XF PAD	897.92	327,079.62	1,496,415.74
51	XF PAD	897.70	327,079.54	1,496,405.94
52	XF PAD	898.06	327,091.27	1,496,406.05
53	XF PAD	898.39	327,090.53	1,496,416.18
54	XF	898.22	327,086.29	1,496,413.19

EXISTING STRUCTURE DATA		
NAME	TYPE	DATA
2-1	SANITARY MANHOLE 1.5	CASTING EL. 901.07 16" S INV. EL. 890.34 16" S INV. EL. 896.60 24" W INV. EL. 889.63 24" E INV. EL. 890.34
5004	CATCH BASIN	CASTING EL. 894.07 15" NE INV. EL. 891.27 6" W INV. EL. 890.87 6" N INV. EL. 891.67 24" S INV. EL. 890.67
5037	STORM MANHOLE	CASTING EL. 895.89 24" N INV. EL. 889.94 24" SE INV. EL. 889.89
5073	SANITARY MANHOLE	CASTING EL. 896.67 15" E INV. EL. 888.57 15" S INV. EL. 885.07 18" N INV. EL. 884.97 15" E INV. EL. 885.27 15" E INV. EL. 885.27
5169	SANITARY MANHOLE	CASTING EL. 895.12 15" E INV. EL. 889.02 15" W INV. EL. 888.92
5691	STORM MANHOLE	CASTING EL. 900.49 48" N INV. EL. 890.81 48" S INV. EL. 890.81 24" E INV. EL. 890.81
5701	STORM MANHOLE	CASTING EL. 901.86 48" N INV. EL. 891.29 48" S INV. EL. 891.29 24" E INV. EL. 891.29
5718	STORM MANHOLE	CASTING EL. 901.88 48" N INV. EL. 891.88 48" S INV. EL. 891.78 15" E INV. EL. 891.88 6" SE INV. EL. 891.88
5726	CATCH BASIN	CASTING EL. 900.70 15" W INV. EL. 891.80 6" N INV. EL. 891.80 6" S INV. EL. 891.80
6702	STORM MANHOLE	CASTING EL. 899.15 48" S INV. EL. 892.61 18" W INV. EL. 894.10 24" E INV. EL. 893.56
9392	STORM MANHOLE	CASTING EL. 900.84 48" N INV. EL. 888.99 48" S INV. EL. 888.99
9591	CATCH BASIN	CASTING EL. 899.47 18" W INV. EL. 889.68 6" S INV. EL. 895.96 15" E INV. EL. 889.68 6" N INV. EL. 889.68
9708	STORM MANHOLE	CASTING EL. 901.77 48" N INV. EL. 889.01 48" S INV. EL. 888.91 6" E INV. EL. 889.01 36" E INV. EL. 889.01
9709	STORM MANHOLE	CASTING EL. 902.61 48" N INV. EL. 889.75 48" S INV. EL. 889.65 18" E INV. EL. 889.75

GENERAL SUMMARY, LEGENDS AND INDEX

CITY OF WAPAKONETA HARDIN PIKE FORCE MAIN REPLACEMENT

NO.	DATE	REVISIONS AFTER ISSUED FOR BID	BY
5			
4			
3			
2			
1			

Jones & Henry Engineers, Ltd.
Fluid thinking®.
www.JHeng.com

JOB NO. 963-7502.004

SCALE NONE

THIS LINE SCALES 1" WHEN PLOTTED TO NOTED SCALE

DESIGNED	DRAWN	CHECKED
TAB	BJD	TAB

STATUS: ISSUED FOR BID

DATE: APRIL 2021

SHEET NO.

G-1

TCL-7502004.G1
4/1/2021 10:37 AM
4/1/2021 10:37 AM

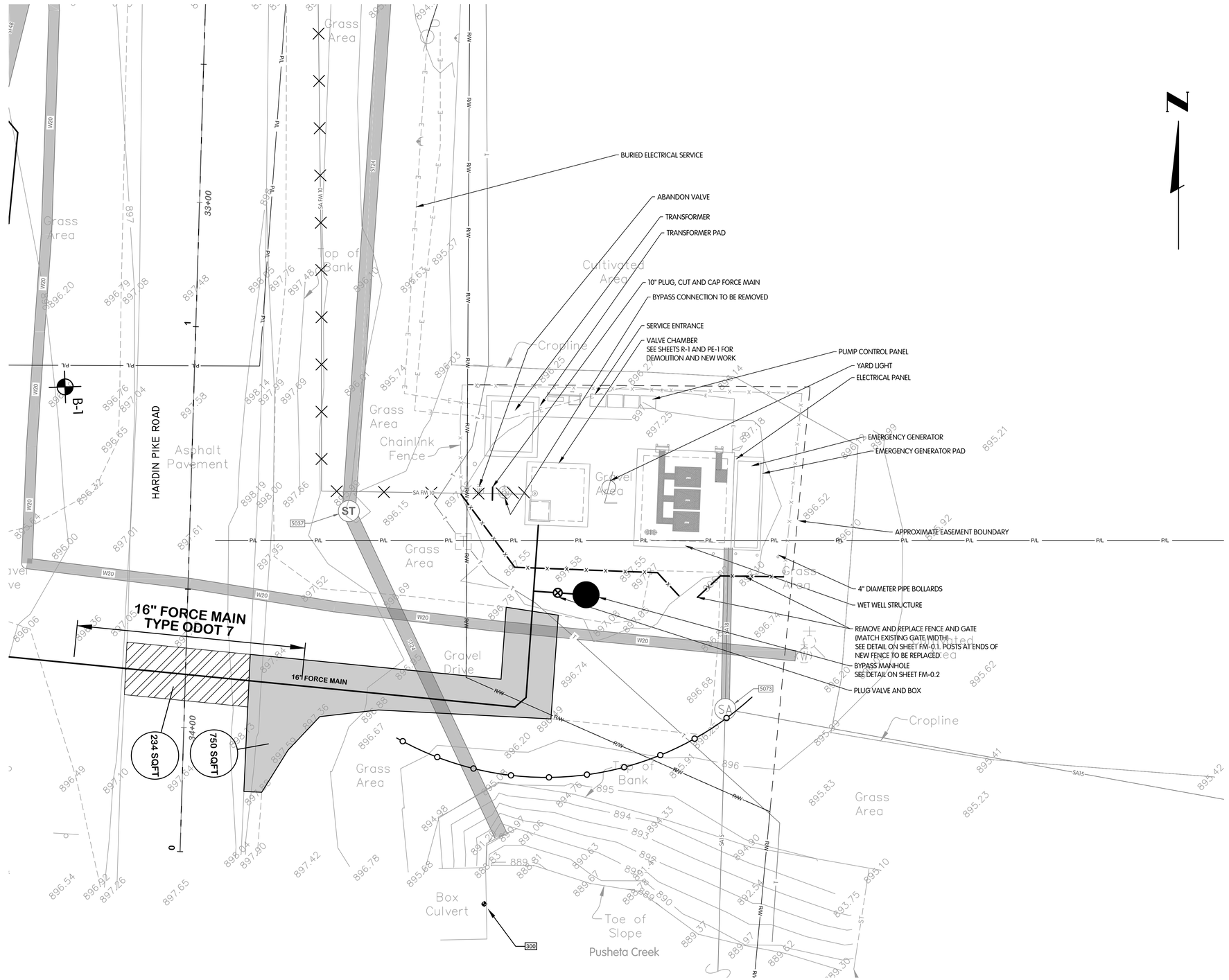

NOTES:
1. RESTRAIN ALL PIPE JOINTS ON BURIED FORCE MAIN AT PUMP STATION SITE. SEE SHEET FM-1.6 FOR LIMITS.

SITE PLAN

PUMP STATION
SITE PLAN

CITY OF WAPAKONETA HARDIN PIKE FORCE MAIN REPLACEMENT

NO.	DATE	REVISIONS AFTER ISSUED FOR BID	BY
5			
4			
3			
2			
1	5/29/19	WCO #1	TAB

Jones & Henry Engineers, Ltd.

Fluid thinking©.
www.JHeng.com

JOB NO. 963-7502.004

SCALE 1"=10'

THIS LINE SCALES 1" WHEN PLOTTED TO NOTED SCALE

DESIGNED	DRAWN	CHECKED
TAB	BJD	TAB

STATUS: ISSUED FOR BID

DATE: APRIL 2021

SHEET NO.

PS-1

2 OF 13

TOL-7502004PS1
4/1/2021 10:37 AM
4/1/2021 10:37 AM

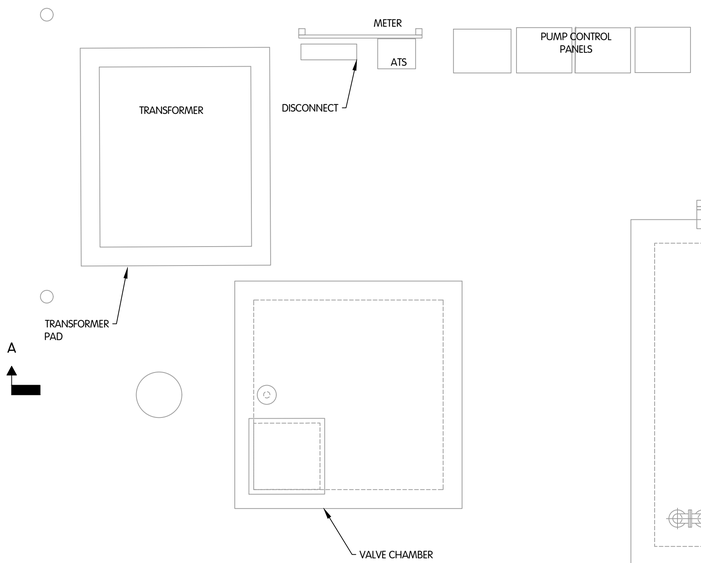

TOP PLAN
¼" = 1'-0"

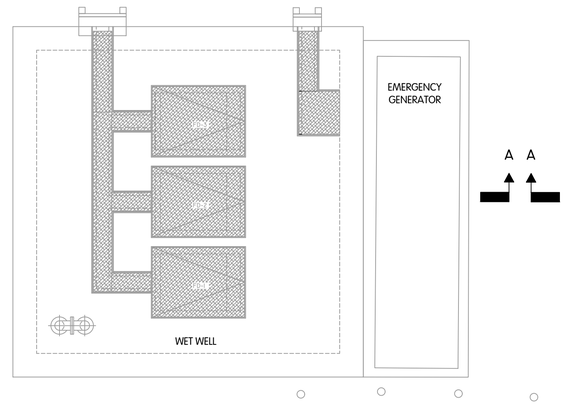

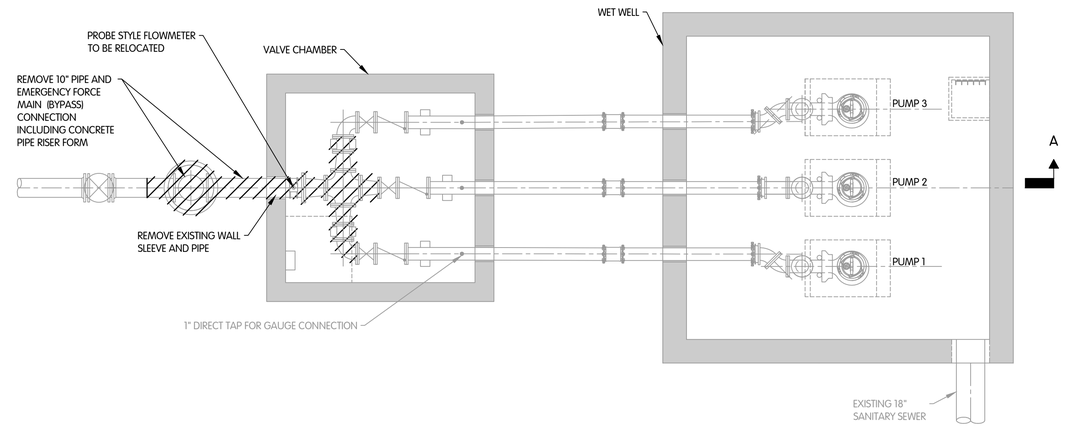

SECTIONAL PLAN AT ELEVATION 893.00
¼" = 1'-0"

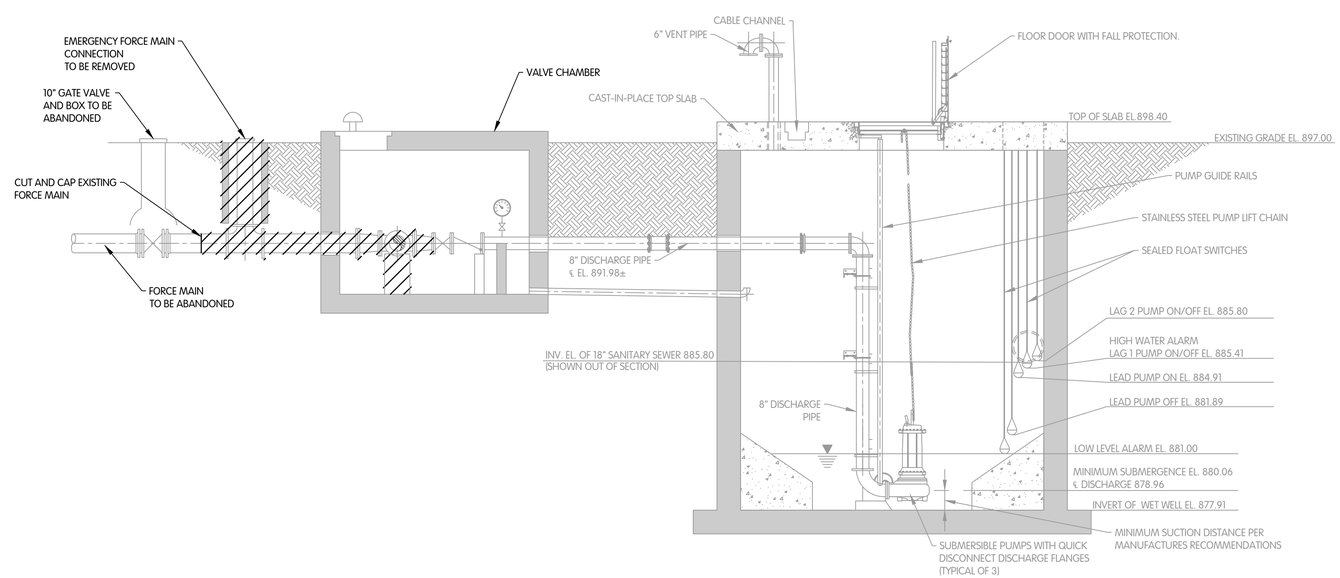

SECTION A-A
¼" = 1'-0"

REMOVALS
PUMP STATION PLANS AND SECTION

CITY OF WAPAKONETA HARDIN PIKE FORCE MAIN REPLACEMENT

NO.	DATE	REVISIONS AFTER ISSUED FOR BID	BY
5			
4			
3			
2			
1			

Jones & Henry Engineers, Ltd.

Fluid thinking©.
www.JHeng.com

JOB NO. 963-7502.004

SCALE DWGSCALE

THIS LINE SCALES 1" WHEN PLOTTED TO NOTED SCALE

DESIGNED	DRAWN	CHECKED
TAB	BJD	TAB

STATUS: ISSUED FOR BID

DATE: APRIL 2021

SHEET NO.
R-1
3 OF 13

TOL-7502004.R01
4/7/2021 10:37 AM
4/7/2021 10:37 AM

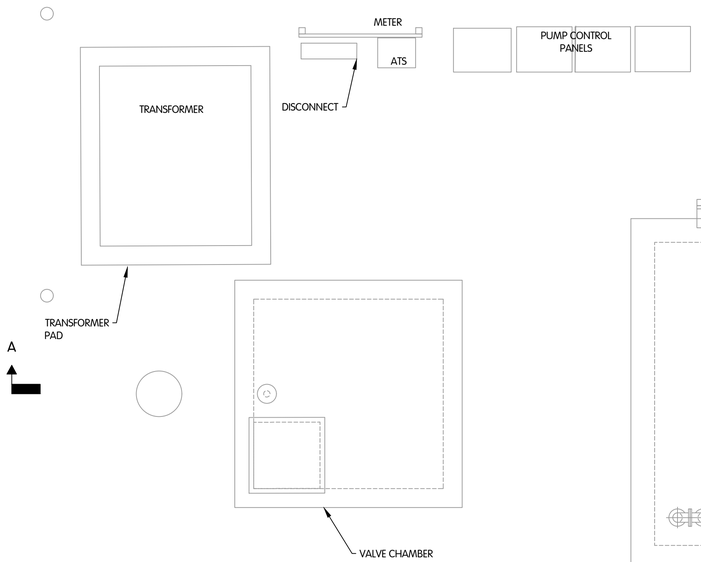

TOP PLAN
¼" = 1'-0"

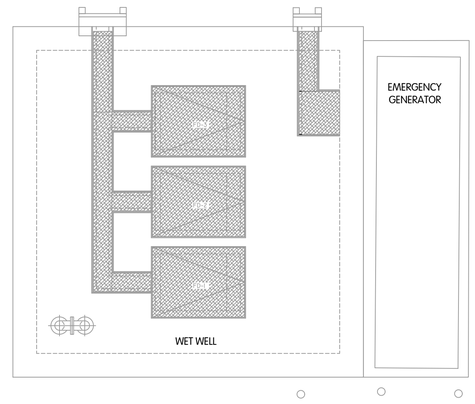

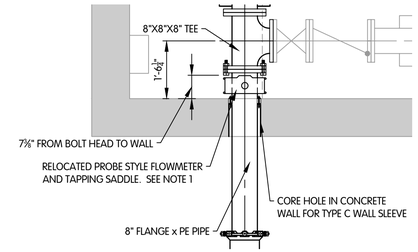

DETAIL C
1/2" = 1'-0"

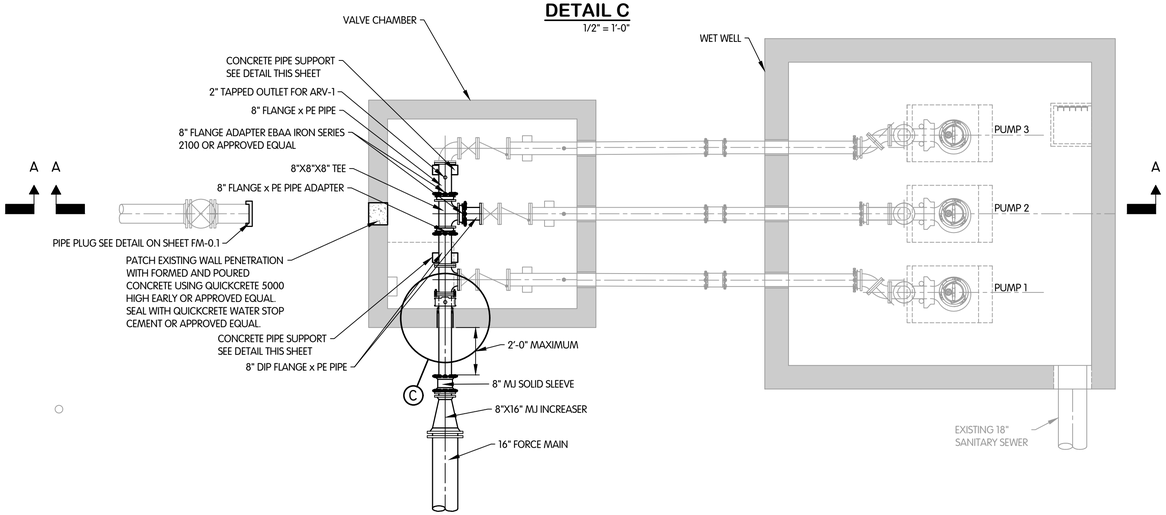

SECTIONAL PLAN AT ELEVATION 893.00
¼" = 1'-0"

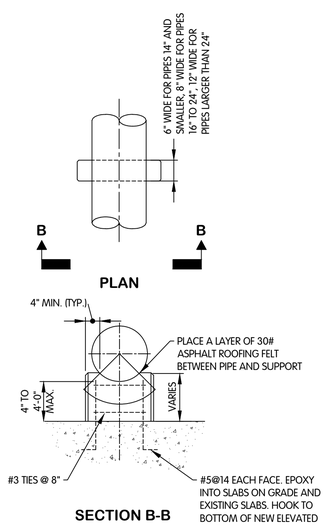

NOTE:
1. CONCRETE SUPPORTS SHALL BE SPACED NOT MORE THAN 12'-0" ON CENTER. SUPPORT PIPING NEAR EACH SIDE OF VALVES, RATE CONTROLLERS, AND COUPLINGS.
2. FOR EXISTING ELEVATED SLABS, LOCATE EXISTING BARS WITH REBAR FINDER. LOCATE SUPPORTS SO DOWELS MISS EXISTING BARS.

TYPE 1

CONCRETE PIPE SUPPORT
NTS

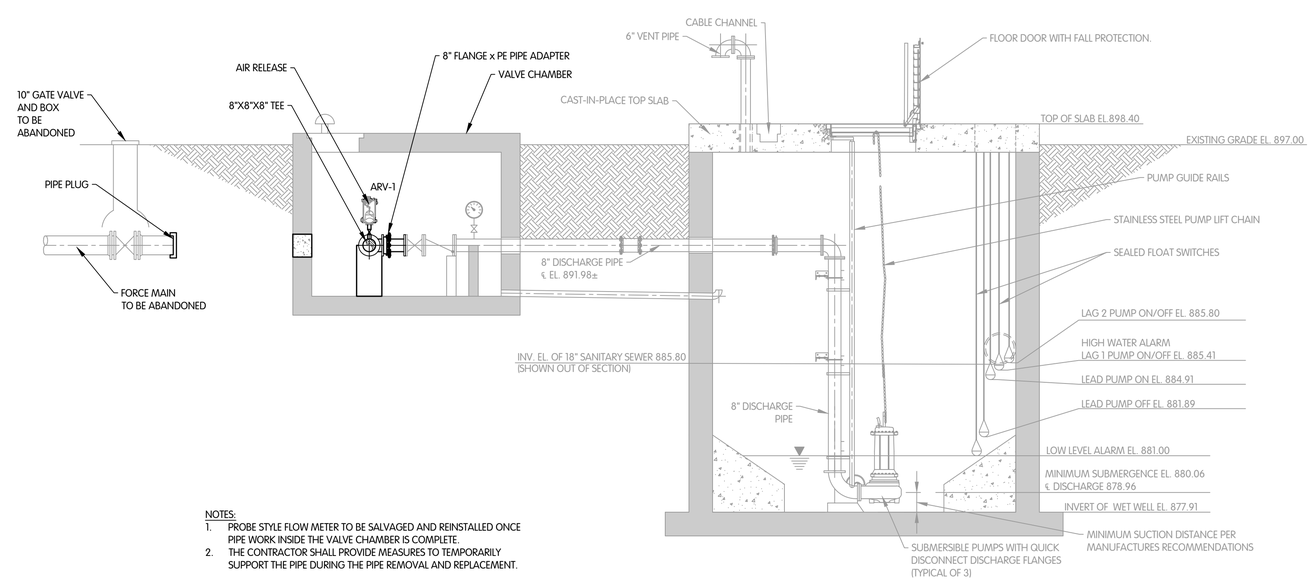

NOTES:
1. PROBE STYLE FLOW METER TO BE SALVAGED AND REINSTALLED ONCE PIPE WORK INSIDE THE VALVE CHAMBER IS COMPLETE.
2. THE CONTRACTOR SHALL PROVIDE MEASURES TO TEMPORARILY SUPPORT THE PIPE DURING THE PIPE REMOVAL AND REPLACEMENT.

SECTION A-A
¼" = 1'-0"

PIPING AND EQUIPMENT
PUMP STATION PLANS AND SECTION

CITY OF WAPAKONETA HARDIN PIKE FORCE MAIN REPLACEMENT

NO.	DATE	REVISIONS AFTER ISSUED FOR BID	BY
5			
4			
3			
2			
1			

Jones & Henry Engineers, Ltd.
Fluid thinking©.
www.JHeng.com

JOB NO. 963-7502.004
SCALE AS NOTED
THIS LINE SCALES 1" WHEN PLOTTED TO NOTED SCALE

DESIGNED	DRAWN	CHECKED
TAB	BJD	TAB

STATUS: ISSUED FOR BID
DATE: APRIL 2021
SHEET NO.
PE-1
4 OF 13

TOL-7502004PS2
4/1/2021 10:38 AM
4/1/2021 10:38 AM

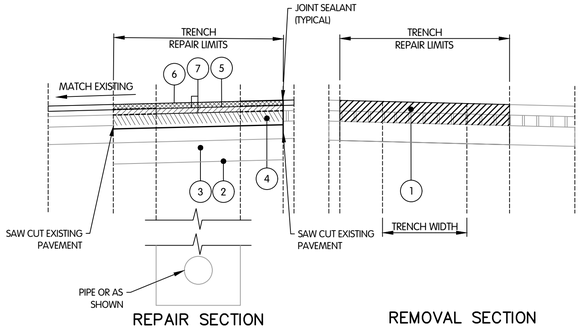

PAVEMENT TRENCH REPAIR TYPICAL SECTION (FLEXIBLE PAVEMENT)

(FOR BLACKHOOF STREET AND ASHLAND AVENUE INTERSECTION) - CITY OF WAPAKONETA NTS

1. ITEM 202 - PAVEMENT AND BASE REMOVED (12" MAX)
   ADDITIONAL PAVEMENT AND BASE REMOVAL DEPTH TO BE INCLUDED IN THE COST OF THE PIPE.
2. ITEM 204 - SUBGRADE COMPACTION
3. ITEM 304 - AGGREGATE BASE (12")
4. ITEM 301 ASPHALT CONCRETE BASE (6")
5. 1¾" ITEM 441 ASPHALT CONCRETE INTERMEDIATE COURSE, TYPE 2. (448)
6. 1½" ITEM 441 ASPHALT CONCRETE SURFACE COURSE, TYPE 1 (448). THIS LAYER TO BE INSTALLED FOLLOWING PAVEMENT PLANNING IN AREAS SCHEDULED
7. ITEM 407 TACK COAT - 0.050 GAL/SY.

NOTE:
THE PAVEMENT SECTION SHALL BE DEFINED AS THE PAVEMENT AND AGGREGATE BASE THICKNESS SHOWN IN THESE TYPICAL SECTIONS FOR THE PURPOSE OF BID ITEM DIVISIONS (PIPE AND PAVEMENT)
THE THICKNESS OF EXISTING PAVEMENT CROSS SECTIONS TO BE REPAIRED IS UNKNOWN.

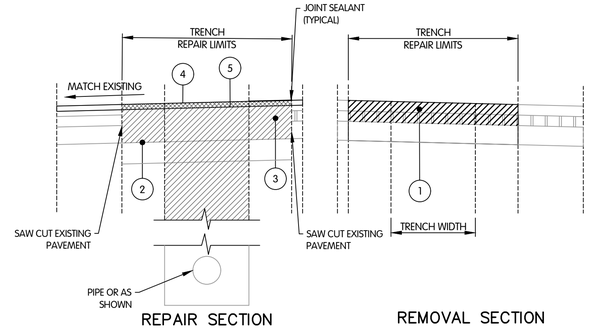

PAVEMENT TRENCH REPAIR TYPICAL SECTION (FLEXIBLE PAVEMENT)

(FOR HARDIN PIKE AND CANNING FACTORY ROAD CROSSINGS) - AUGLAIZE COUNTY ENGINEER NTS

1. ITEM 202 - PAVEMENT AND BASE REMOVED (12" MAX)
   ADDITIONAL PAVEMENT AND BASE REMOVAL DEPTH TO BE INCLUDED IN THE COST OF THE PIPE.
2. ITEM 204 - SUBGRADE COMPACTION
3. ITEM 613, SEE TRENCH DETAILS AND SPECIFICATION SECTION 02200 FOR LIMITS
4. 2" ITEM 441 ASPHALT CONCRETE SURFACE COURSE, TYPE 1. (448)
5. ITEM 407 TACK COAT - 0.050 GAL/SY. USE RUBBERIZED ASPHALT EMULSION IN ACCORDANCE WITH 703.12 BETWEEN ASPHALT AND CONCRETE SURFACES.

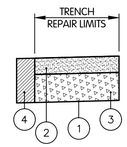

1. ITEM 204 - SUBGRADE COMPACTION
2. ITEM 411 - 6" COMPACTED AGGREGATE WEARING COURSE (BERM)
3. ITEM 304 - 6" AGGREGATE BASE
4. ITEM 202 - PAVEMENT REMOVAL (FULL DEPTH/WIDTH)

GRAVEL ROAD AND BERM REPAIR SECTION

NTS

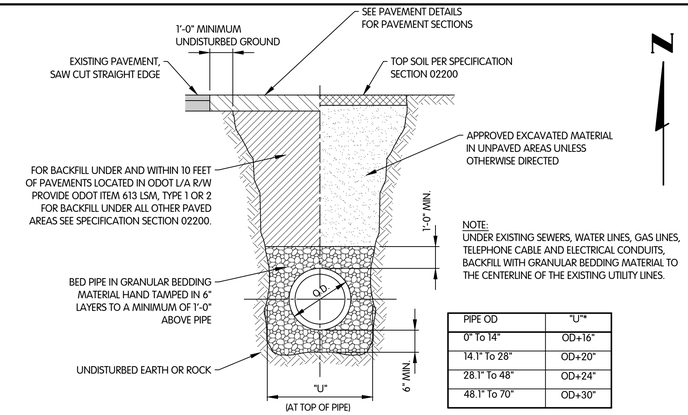

NOTE:
UNDER EXISTING SEWERS, WATER LINES, GAS LINES, TELEPHONE CABLE AND ELECTRICAL CONDUITS, BACKFILL WITH GRANULAR BEDDING MATERIAL TO THE CENTERLINE OF THE EXISTING UTILITY LINES.

PIPE OD	"U"*
0" To 14"	OD+16"
14.1" To 28"	OD+20"
28.1" To 48"	OD+24"
48.1" To 70"	OD+30"

TRENCH SCHEDULE

* NOTE:
"U" IS THE MINIMUM WIDTH FOR FLEXIBLE PIPES IN ACCORDANCE WITH ASTM D-2321 AND D-2774.

TRENCH DETAIL FOR FLEXIBLE PIPE

NTS

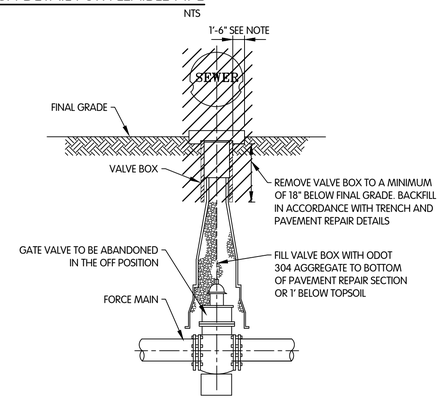

VALVE ABANDONMENT DETAIL

NTS

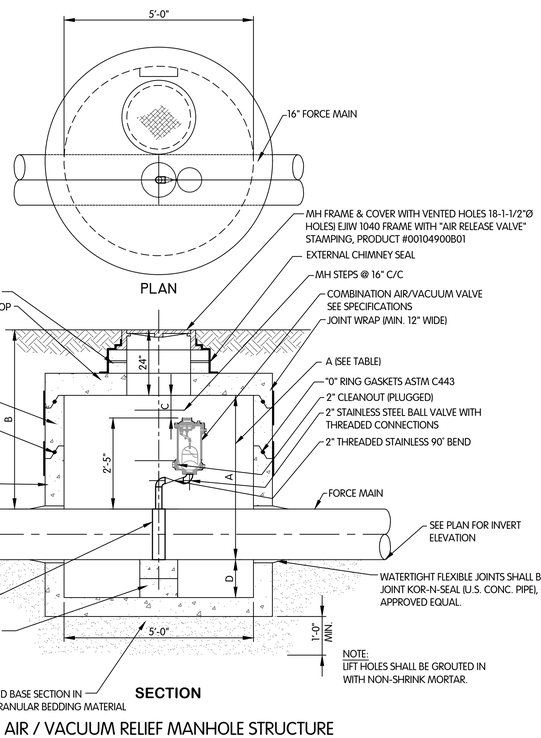

DIMENSION TABLE (H)					
LOCATION	A	B	C	D	RIM
ARV-1	*	*	*	*	*
ARV-2	5.78'	6.36'	3.37'	1.22	901.12

* SEE SHEET PE-1
A CONTINGENT AIR RELEASE VALVE MANHOLE IS INCLUDED WITH DIMENSIONS TO MATCH ARV-2.

NOTE:
LIFT HOLES SHALL BE GROUTED IN WITH NON-SHRINK MORTAR.

AIR / VACUUM RELIEF MANHOLE STRUCTURE

½"=1'-0"

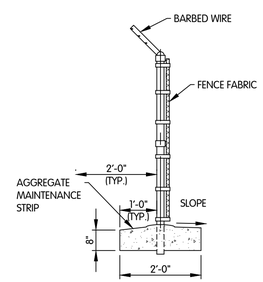

FENCE AND MAINTENANCE STRIP DETAIL

NTS

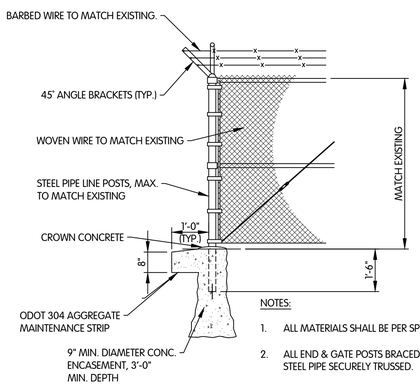

NOTES:
1. ALL MATERIALS SHALL BE PER SPECIFICATION SECTION 02710.
2. ALL END & GATE POSTS BRACED HORIZONTAL WITH 1⅞" O.D. STEEL PIPE SECURELY TRUSSED.
3. PROVIDE MFR'S STANDARD FOR VERTICAL & HORIZONTAL BRACING, AND LATCH & PROVISIONS FOR OWNERS LOCK.

CHAIN LINK FENCE DETAIL

NTS

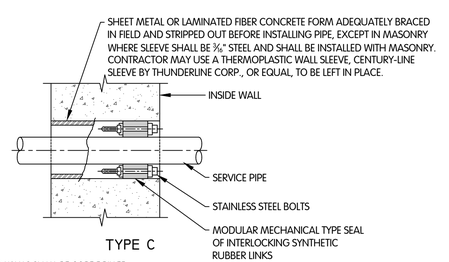

NOTE:
1. EXISTING WALLS SHALL BE CORE DRILLED.
2. CONCRETE SHALL BE WORKED IN AND VIBRATED TO ELIMINATE ALL VOIDS IN CONCRETE - IF VOIDS DO REMAIN, FILL WITH GROUT BEFORE INSTALLING PIPE AND RUBBER SEALS.
3. UNLESS OTHERWISE SHOWN ON THE DRAWINGS ALL INTERIOR WALL PENETRATIONS SHALL USE TYPE C PIPE SLEEVE.

TYPE C WALL SLEEVE DETAIL

¼" = 1'-0"

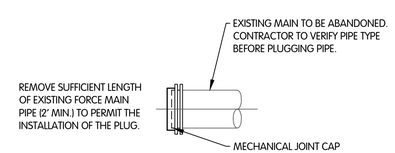

FORCE MAIN PLUG DETAIL

NTS

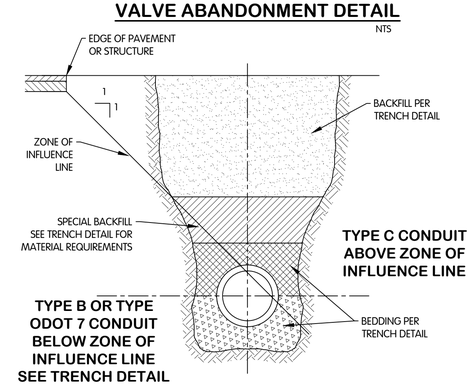

PARALLEL ZONE OF INFLUENCE DETAIL

NTS

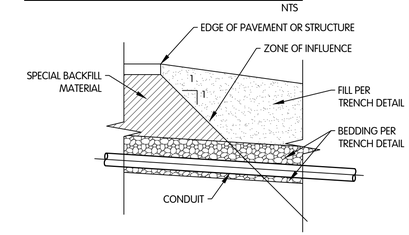

TRANSVERSE ZONE OF INFLUENCE

NTS

FORCE MAIN DETAILS

CITY OF WAPAKONETA HARDIN PIKE FORCE MAIN REPLACEMENT

NO.	DATE	REVISIONS AFTER ISSUED FOR BID	BY
5			
4			
3			
2			
1			

Jones & Henry Engineers, Ltd.

Fluid thinking©.
www.JHeng.com

JOB NO. 963-7502.004

SCALE AS NOTED

THIS LINE SCALES 1" WHEN PLOTTED TO NOTED SCALE

DESIGNED	DRAWN	CHECKED
TAB	BJD	TAB

STATUS: ISSUED FOR BID

DATE: APRIL 2021

SHEET NO.

FM-0.1

5 OF 13

TOL-7502004FM01
4/7/2021 10:38 AM
4/7/2021 10:38 AM

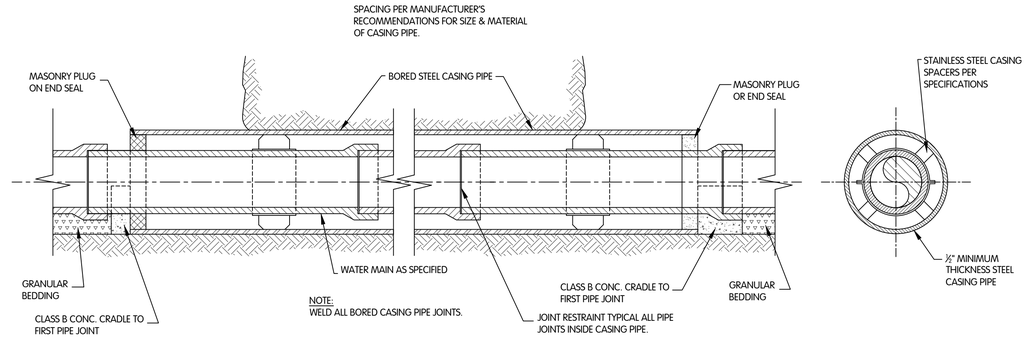

BORED STEEL CASING PIPE WITH CARRIER PIPE DETAIL

NTS

NOTES:
1. MATERIALS SHALL BE IN ACCORDANCE WITH ODOT 638.11

Joint Restraint Table			
		Restrained Length Of Pipe See Note 1	
		Mains	
	Fitting Type	16"	Comments
Horizontal Bends	90°	39'	
	45°	16'	
	22 1/2°	8'	
	11 1/4°	4'	
Reducers	Main x 8"	84'	See Note 2
Tees	Main x 8"	32'	See Note 3
Vertical Offset	L1	48'	See Note 4
	L2	12'	See Note 4

NOTE:
1. THE RESTRAINED PIPE LENGTHS SHOWN ABOVE ARE FOR PVC INSTALLED IN A TYPE 3 TRENCH IN TYPE CL SOIL BACKFILLED WITH GRANULAR MATERIAL WITH 4' OF COVER AND A SAFETY FACTOR OF 2.0. OTHER SITUATIONS MAY REQUIRE ADDITIONAL RESTRAINT LENGTHS. CONSULT THE ENGINEER FOR SITUATIONS NOT PROVIDED.
2. RESTRAINED LENGTH FOR REDUCERS MEASURED ALONG LARGER DIAMETER PIPE.
3. RESTRAINED LENGTH MEASURED ALONG BRANCH CONNECTION SHALL MEASURE 2'
4. ALL JOINTS BETWEEN UPPER AND LOWER PIPE SHALL BE RESTRAINED. LOWER PIPE ASSUMED AT 7' DEPTH

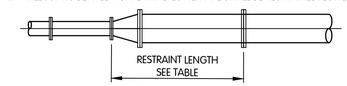

TYPICAL REDUCER RESTRAINT

NTS

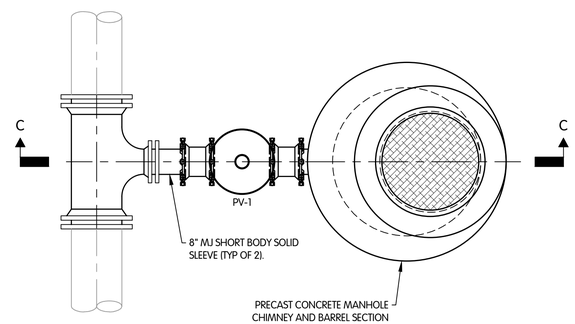

PLAN

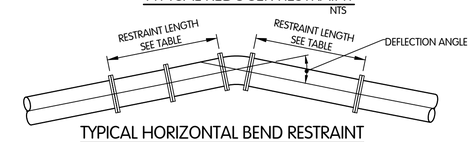

TYPICAL HORIZONTAL BEND RESTRAINT

NTS

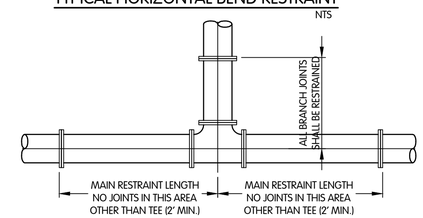

TYPICAL HORIZONTAL TEE RESTRAINT

NTS

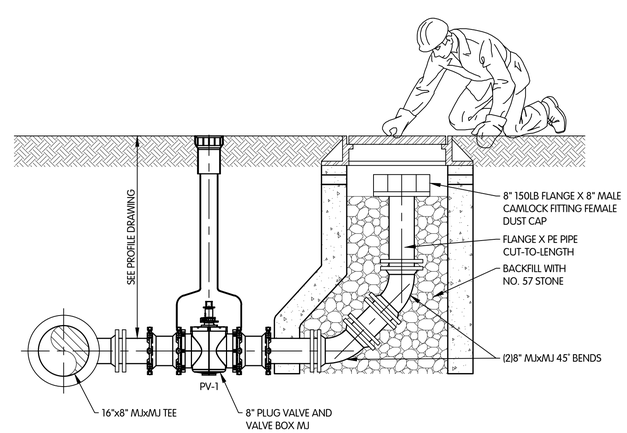

SECTION C-C

BYPASS MANHOLE DETAIL

½"=1'-0"

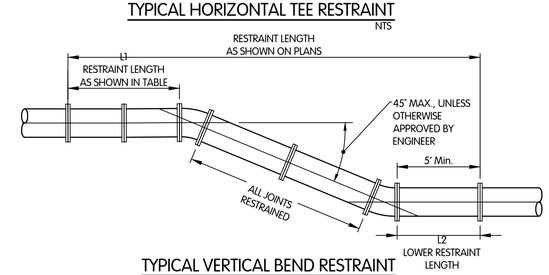

TYPICAL VERTICAL BEND RESTRAINT

NTS

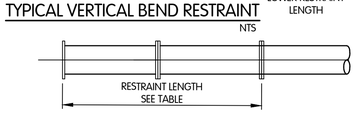

TYPICAL DEAD END RESTRAINT

NTS

FORCE MAIN DETAILS

CITY OF WAPAKONETA HARDIN PIKE FORCE MAIN REPLACEMENT

NO.	DATE	REVISIONS AFTER ISSUED FOR BID	BY
5			
4			
3			
2			
1			

Jones & Henry Engineers, Ltd.
Fluid thinking©.
www.JHeng.com

JOB NO. 963-7502.004

SCALE AS NOTED

THIS LINE SCALES 1" WHEN PLOTTED TO NOTED SCALE

DESIGNED	DRAWN	CHECKED
TAB	BJD	TAB

STATUS: ISSUED FOR BID

DATE: APRIL 2021

SHEET NO.

FM-0.2

TOL-7502004FM02
4/1/2021 10:38 AM
4/1/2021 10:38 AM

BENCH MARK 301
TOP OF CONCRETE SIGN POST
EL. 899.59

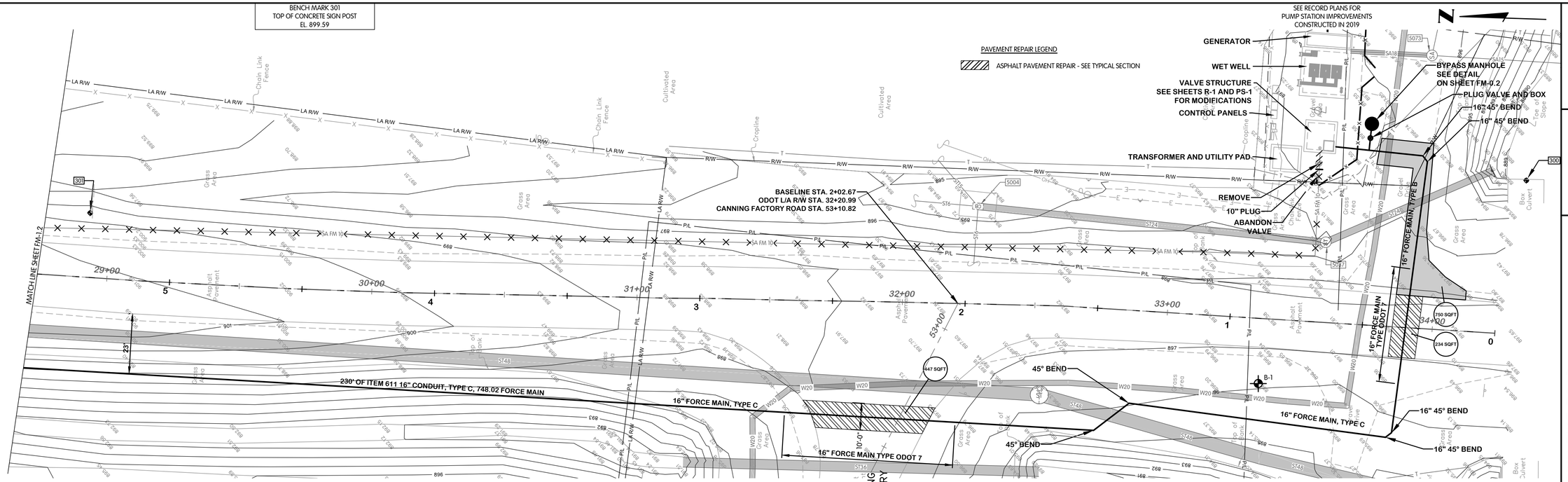

PAVEMENT LEGEND

ASPHALT PAVEMENT REPAIR, SEE TYPICAL SECTION ON SHEET FM-0.1

GRAVEL DRIVE REPAIR, SEE TYPICAL SECTION ON SHEET FM-0.1

NOTES:

1. THE LIMITS OF THE REQUIRED SURFACE REPAIRS ASSOCIATED WITH THE WORK IMPROVEMENTS ARE SHOWN ON THIS SHEET. THE LIMITS FOR THE SURFACE IMPROVEMENTS SHOWN ON THIS SHEET SHALL BE BASED UPON THE SPECIFIED PAY LIMITS EXCEPTING ADDITIONAL AREAS EXPANDED AS SHOWN. RESTORATION OF SURFACE FACILITIES DAMAGED BEYOND THESE LIMITS SHOWN SHALL NOT BE INCLUDED FOR PAYMENT UNLESS APPROVED BY THE ENGINEER.
2. FOOTAGES AND ODOT MATERIAL DESIGNATIONS ARE PROVIDED FOR PIPES LOCATED IN ODOT L/A R/W AS REQUIRED BY ODOT DISTRICT 7. MEASUREMENT AND PAYMENT WILL BE AS DEFINED IN SPECIFICATION SECTION 01010.
3. DISTANCES TO THE EDGE OF ASPHALT PAVEMENT ARE SHOWN FOR THE MINIMUM DISTANCE TO THE PIPE CENTERLINE ON EACH SHEET AND AT HORIZONTAL BENDS FOR WORK IN ODOT L/A R/W.
4. DEPTHS SHOWN ON THE PROFILE ARE THE MINIMUM FOR EACH SHEET WITH WORK SHOWN IN THE ODOT L/A R/W.
5. DISTANCES SHOWN TO L/A R/W ARE SHOWN TO THE ACCURACY AVAILABLE TO THE ENGINEER.
6. THE DEPTH OF THE 20" WATER MAIN WAS UNABLE TO BE VERIFIED DURING THE DESIGN PHASE. THE CONTRACTOR SHALL FIELD VERIFY THE LOCATION AND DEPTH OF THE 20" WATER MAIN PRIOR TO COMMENCING WORK ON THE FORCE MAIN TO PERMIT THE ENGINEER TO ADJUST THE HORIZONTAL AND VERTICAL ALIGNMENT OF THE FORCE MAIN AS NECESSARY.

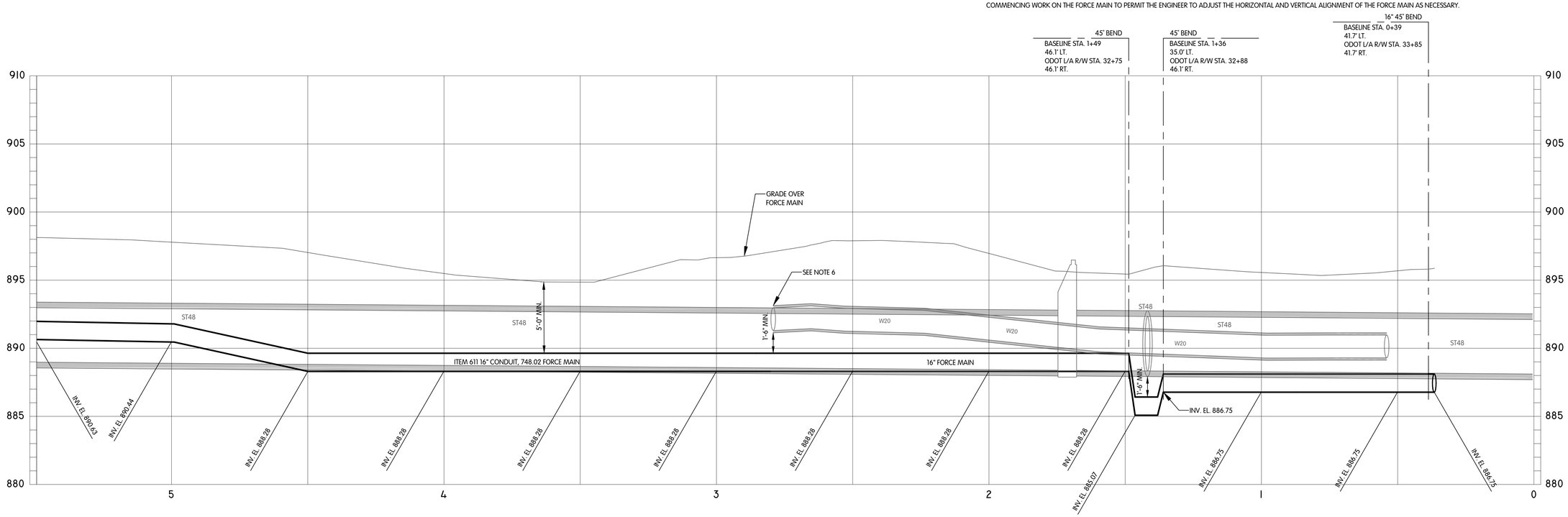

HARDIN PIKE ROAD
SANITARY FORCE MAIN
PLAN AND PROFILE
STA. 0+00 TO 5+50

CITY OF WAPAKONETA HARDIN PIKE FORCE MAIN REPLACEMENT

NO.	DATE	REVISIONS AFTER ISSUED FOR BID	BY
5			
4			
3			
2			
1			

Jones & Henry Engineers, Ltd.

Fluid thinking©.
www.JHeng.com

JOB NO.	963-7502.004
SCALE	1" = 20'HOR 1" = 4'VERT

THIS LINE SCALES 1" WHEN PLOTTED TO NOTED SCALE

DESIGNED	DRAWN	CHECKED
TAB	CAL	TAB

STATUS: ISSUED FOR BID
DATE: APRIL 2021

SHEET NO.
FM-1.1
7 OF 13

TOL-7502004.PP01
4/1/2021 10:34 AM
4/1/2021 10:38 AM

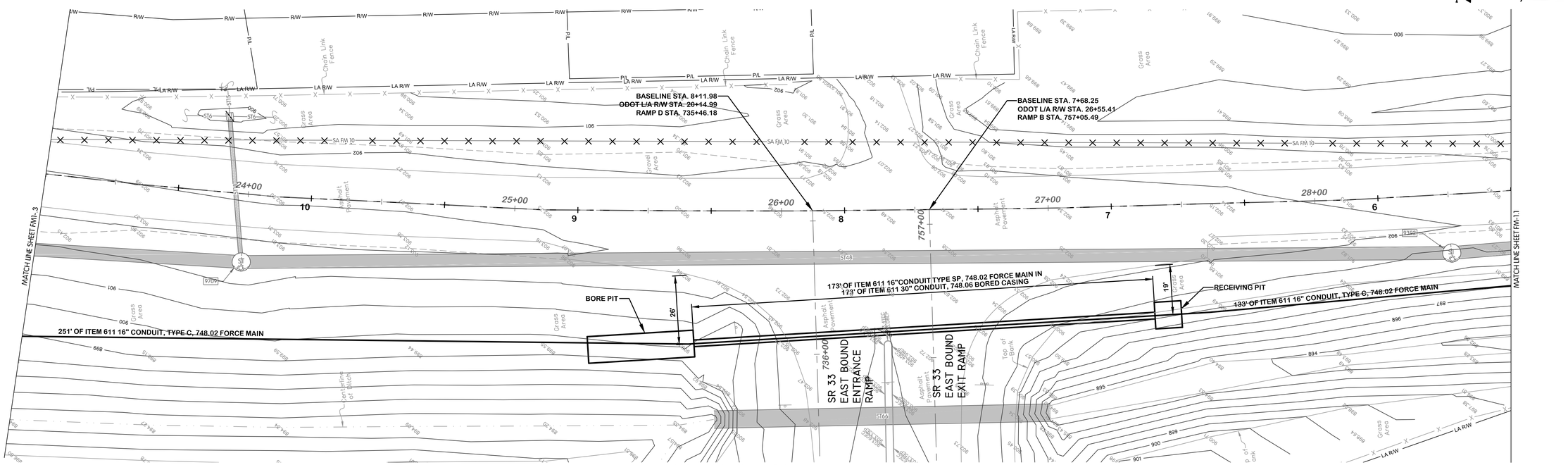

NOTES:

1. FOOTAGES AND ODOT MATERIAL DESIGNATIONS ARE PROVIDED FOR PIPES LOCATED IN ODOT L/A R/W AS REQUIRED BY ODOT DISTRICT 7. MEASUREMENT AND PAYMENT WILL BE AS DEFINED IN SPECIFICATION SECTION 01010.
2. DISTANCES TO THE EDGE OF ASPHALT PAVEMENT ARE SHOWN FOR THE MINIMUM DISTANCE TO THE PIPE CENTERLINE ON EACH SHEET AND AT HORIZONTAL BENDS FOR WORK IN ODOT L/A R/W.
3. DEPTHS SHOWN ON THE PROFILE ARE THE MINIMUM FOR EACH SHEET WITH WORK SHOWN IN THE ODOT L/A R/W.
4. DISTANCES SHOWN TO L/A R/W ARE SHOWN TO THE ACCURACY AVAILABLE TO THE ENGINEER.

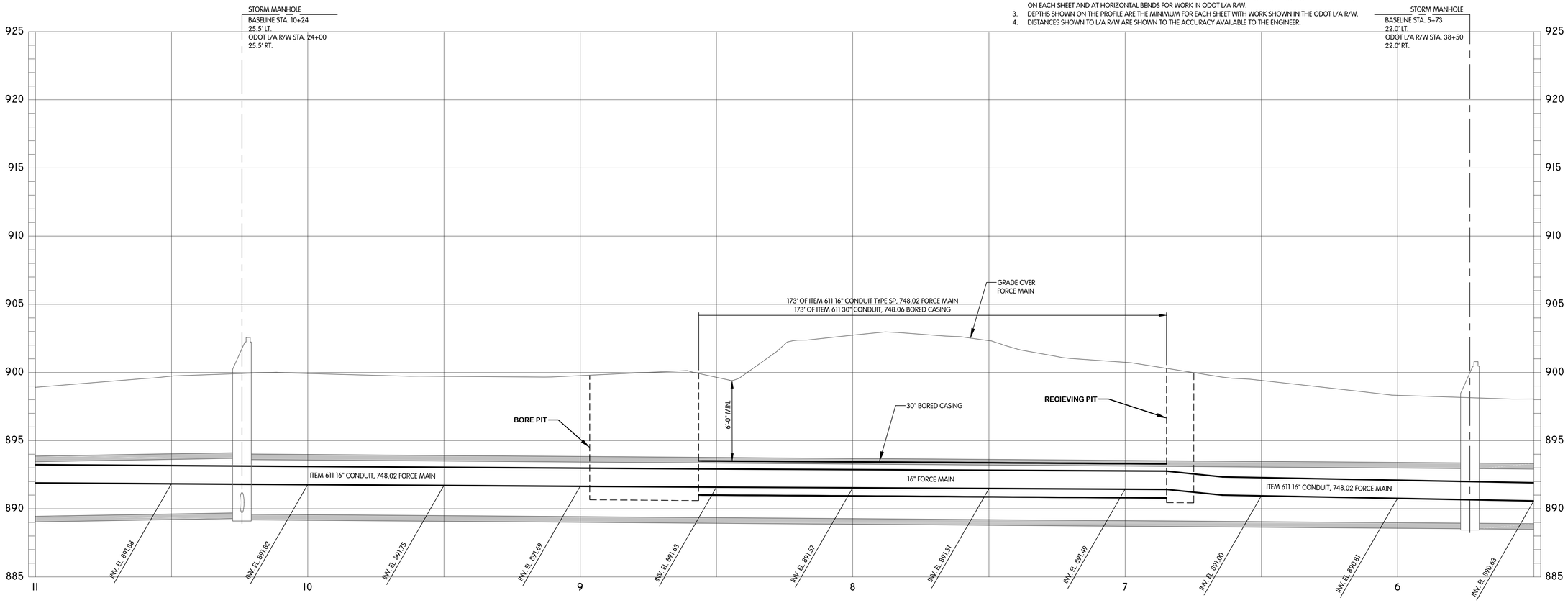

HARDIN PIKE ROAD SANITARY FORCEMAIN PLAN AND PROFILE STA. 5+50 TO 11+00

CITY OF WAPAKONETA HARDIN PIKE FORCE MAIN REPLACEMENT

NO.	DATE	REVISIONS AFTER ISSUED FOR BID	BY
5			
4			
3			
2			
1			

Jones & Henry Engineers, Ltd.

Fluid thinking©.
www.JHeng.com

JOB NO. 963-7502.004

SCALE 1" = 20' HOR
1" = 4' VERT

THIS LINE SCALES 1" WHEN PLOTTED TO NOTED SCALE

DESIGNED	DRAWN	CHECKED
TAB	CAL	TAB

STATUS: ISSUED FOR BID

DATE: APRIL 2021

SHEET NO.

FM-1.2

8 OF 13

TOL-7502004.PP02
4/11/2021 10:38 AM
4/11/2021 10:38 AM

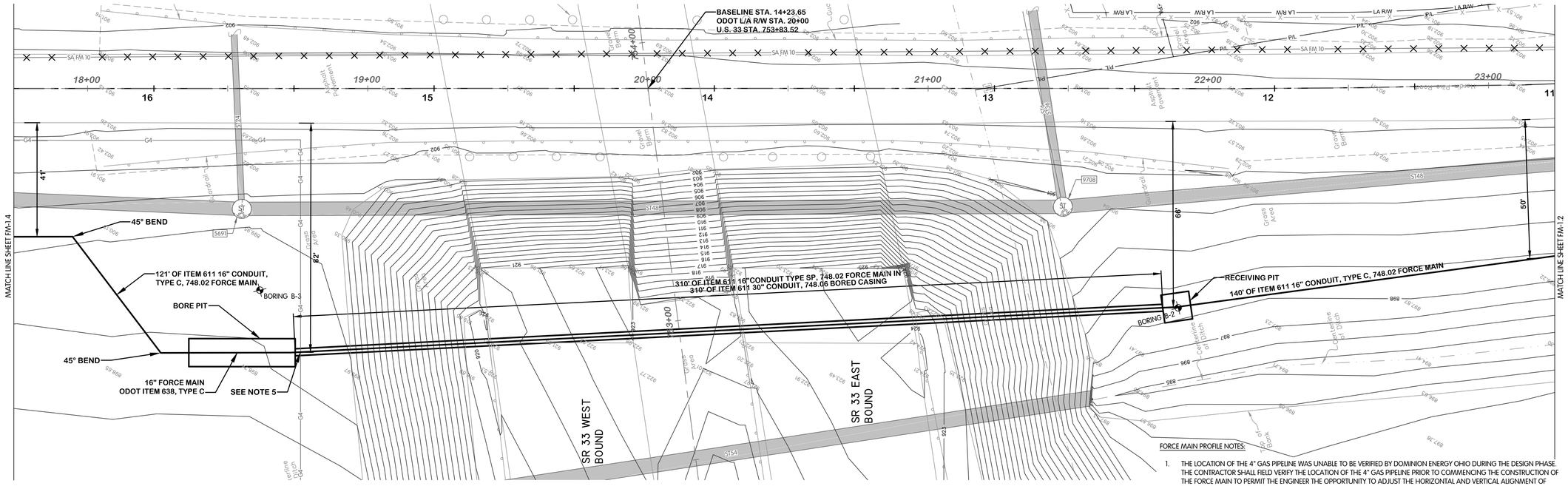

SOUTH BLACKHOOF STREET AND HARDIN PIKE ROAD

FORCE MAIN PROFILE NOTES:

1. THE LOCATION OF THE 4" GAS PIPELINE WAS UNABLE TO BE VERIFIED BY DOMINION ENERGY OHIO DURING THE DESIGN PHASE. THE CONTRACTOR SHALL FIELD VERIFY THE LOCATION OF THE 4" GAS PIPELINE PRIOR TO COMMENCING THE CONSTRUCTION OF THE FORCE MAIN TO PERMIT THE ENGINEER THE OPPORTUNITY TO ADJUST THE HORIZONTAL AND VERTICAL ALIGNMENT OF THE FORCE MAIN AS NECESSARY.
2. FOOTAGES AND ODOT MATERIAL DESIGNATIONS ARE PROVIDED FOR PIPES LOCATED IN ODOT L/A R/W AS REQUIRED BY ODOT DISTRICT 7. MEASUREMENT AND PAYMENT WILL BE AS DEFINED IN SPECIFICATION SECTION 01010.
3. DISTANCES TO THE EDGE OF ASPHALT PAVEMENT ARE SHOWN FOR THE MINIMUM DISTANCE TO THE PIPE CENTERLINE ON EACH SHEET AND AT HORIZONTAL BENDS FOR WORK IN ODOT L/A R/W.
4. DEPTHS SHOWN ON THE PROFILE ARE THE MINIMUM FOR EACH SHEET WITH WORK SHOWN IN THE ODOT L/A R/W.
5. DISTANCES SHOWN TO L/A R/W ARE SHOWN TO THE ACCURACY AVAILABLE TO THE ENGINEER.

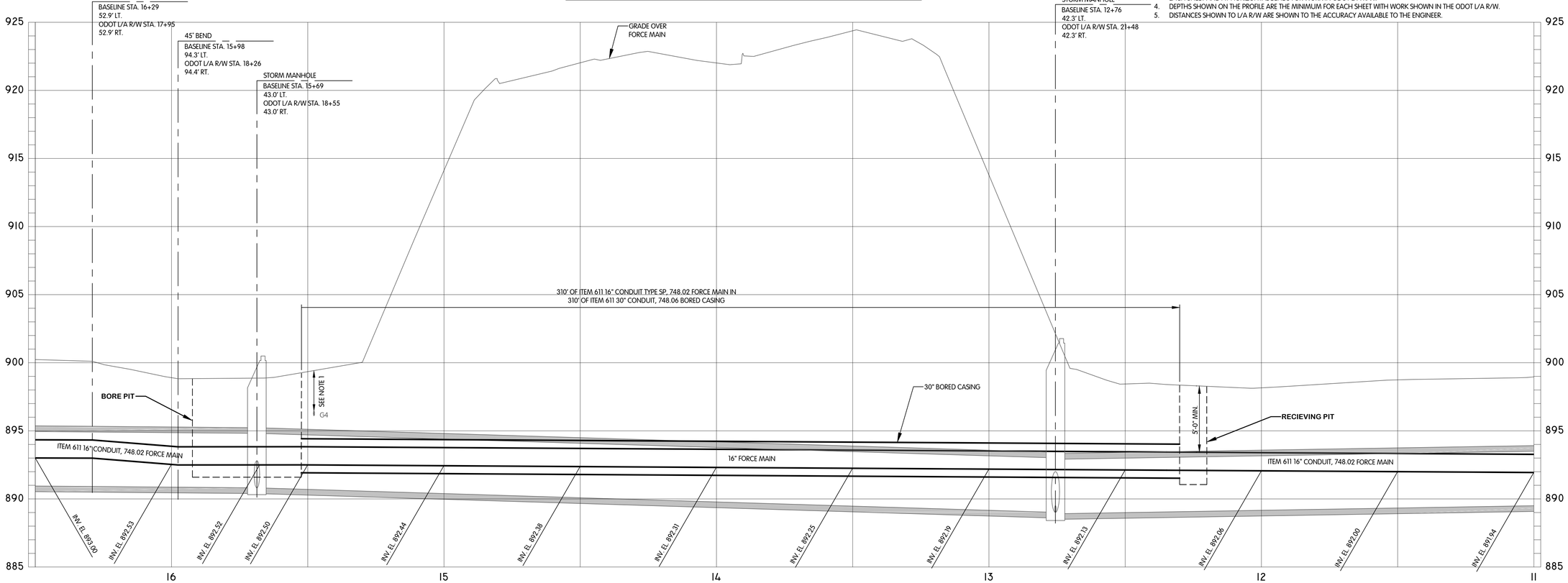

SOUTH BLACKHOOF STREET AND HARDIN PIKE ROAD
SANITARY FORCEMAIN
PLAN AND PROFILE
STA. 11+00 TO 16+50

CITY OF WAPAKONETA HARDIN PIKE FORCE MAIN REPLACEMENT

NO.	DATE	REVISIONS AFTER ISSUED FOR BID	BY
5			
4			
3			
2			
1			

Jones & Henry Engineers, Ltd.
Fluid thinking©.
www.JHeng.com

JOB NO. 963-7502.004
SCALE 1" = 20' HOR, 1" = 4' VERT
THIS LINE SCALES 1" WHEN PLOTTED TO NOTED SCALE

DESIGNED	DRAWN	CHECKED
TAB	CAL	TAB

STATUS: ISSUED FOR BID
DATE: APRIL 2021
SHEET NO.
FM-1.3
9 OF 13

TOL-7502004PP03
4/1/2021 10:39 AM
4/1/2021 10:39 AM

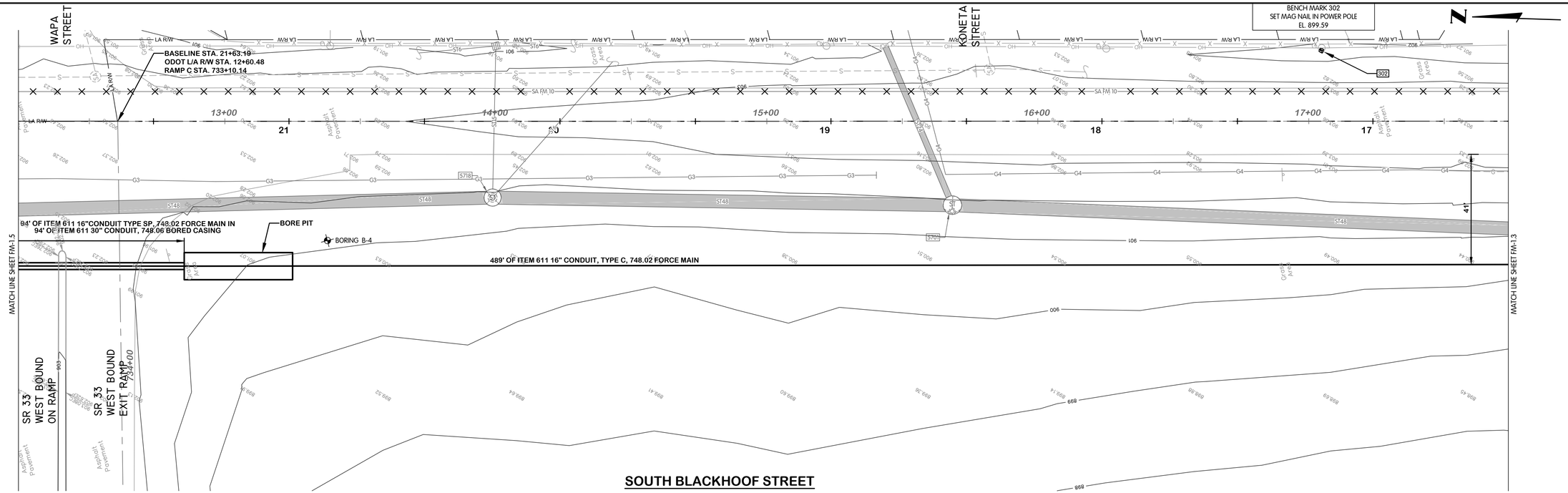

NOTES:

1. FOOTAGES AND ODOT MATERIAL DESIGNATIONS ARE PROVIDED FOR PIPES LOCATED IN ODOT L/A R/W AS REQUIRED BY ODOT DISTRICT 7. MEASUREMENT AND PAYMENT WILL BE AS DEFINED IN SPECIFICATION SECTION 01010.
2. DISTANCES TO THE EDGE OF ASPHALT PAVEMENT ARE SHOWN FOR THE MINIMUM DISTANCE TO THE PIPE CENTERLINE ON EACH SHEET AND AT HORIZONTAL BENDS FOR WORK IN ODOT L/A R/W.
3. DEPTHS SHOWN ON THE PROFILE ARE THE MINIMUM FOR EACH SHEET WITH WORK SHOWN IN THE ODOT L/A R/W.
4. DISTANCES SHOWN TO L/A R/W ARE SHOWN TO THE ACCURACY AVAILABLE TO THE ENGINEER.

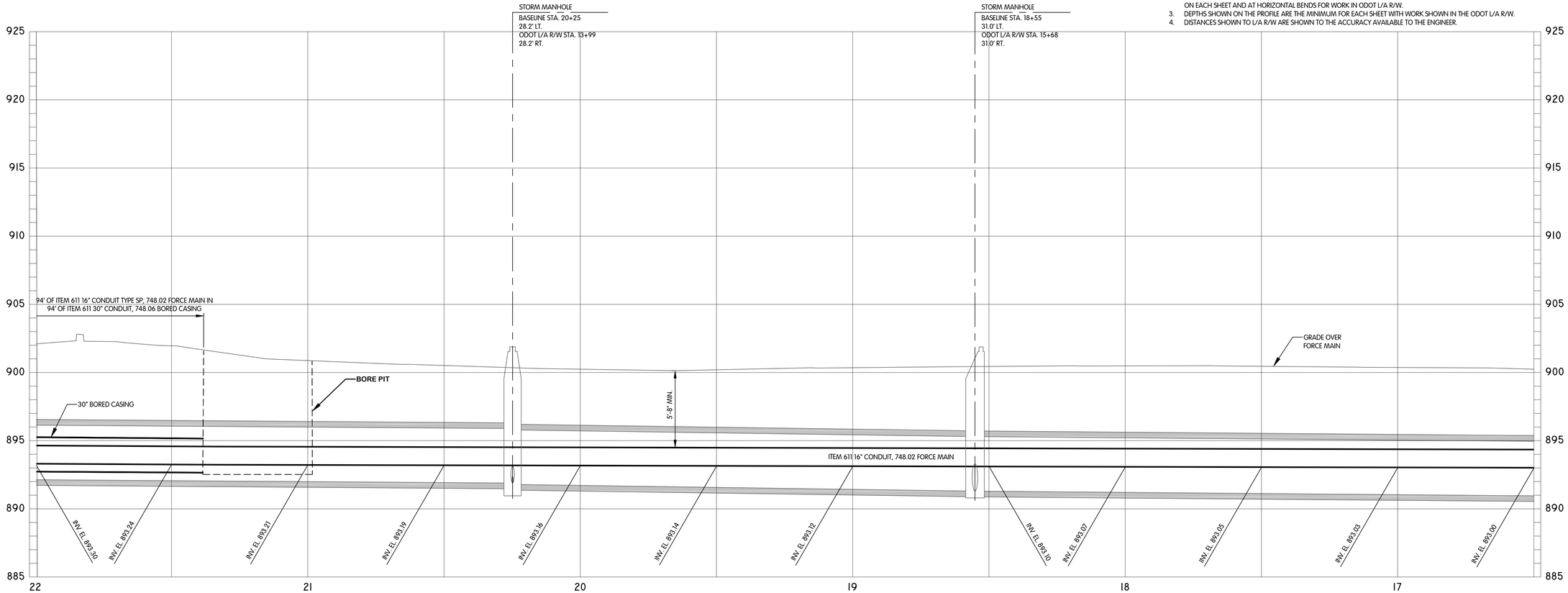

SOUTH BLACKHOOF STREET
SANITARY FORCEMAIN
PLAN AND PROFILE
STA. 16+50 TO 22+00

CITY OF WAPAKONETA HARDIN PIKE FORCE MAIN REPLACEMENT

NO.	DATE	REVISIONS AFTER ISSUED FOR BID	BY
5			
4			
3			
2			
1			

Jones & Henry Engineers, Ltd.

Fluid thinking©.
www.JHeng.com

JOB NO. 963-7502.004

SCALE 1" = 20' HOR
1" = 4' VERT

THIS LINE SCALES 1" WHEN PLOTTED TO NOTED SCALE

DESIGNED	DRAWN	CHECKED
TAB	CAL	TAB

STATUS: ISSUED FOR BID

DATE: APRIL 2021

SHEET NO.

FM-1.4

10 OF 13

T:\0L-75020\LPP04
4/11/2021 10:39 AM
4/11/2021 10:39 AM

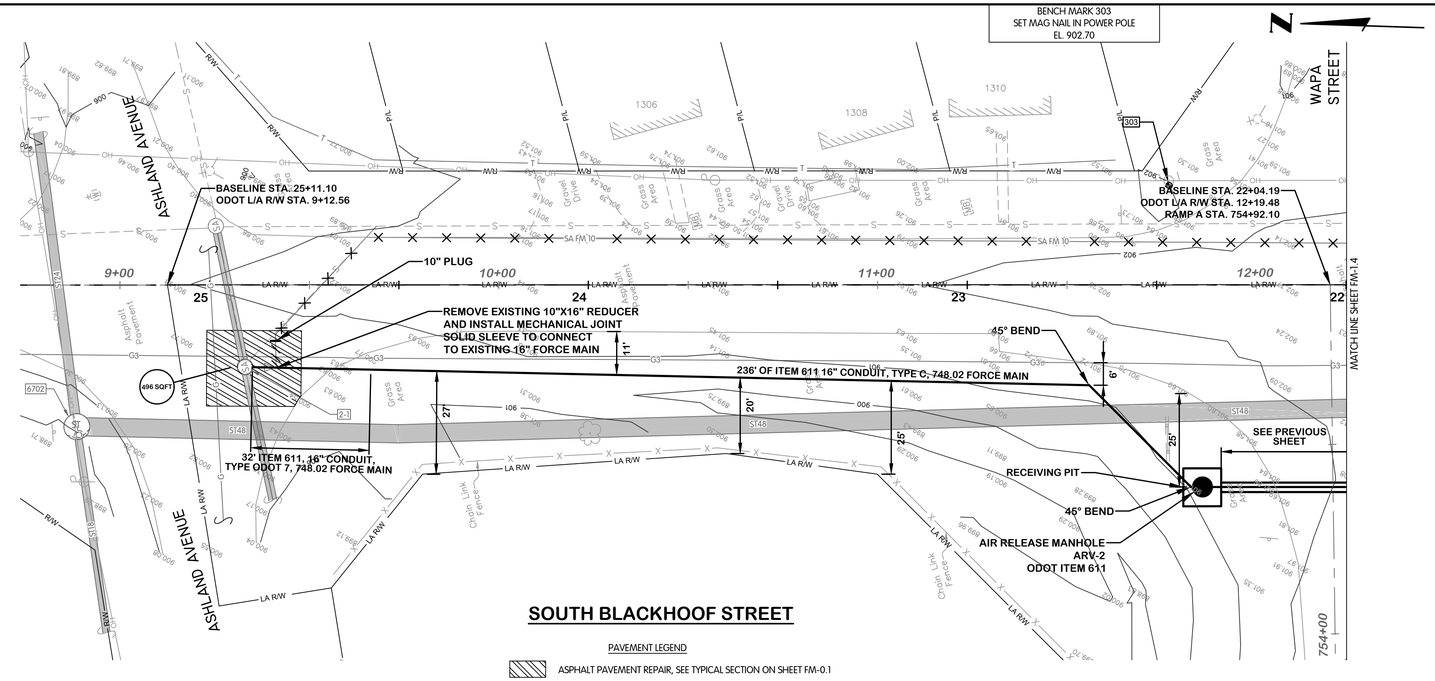

SOUTH BLACKHOOF STREET

PAVEMENT LEGEND

ASPHALT PAVEMENT REPAIR, SEE TYPICAL SECTION ON SHEET FM-0.1

GRAVEL DRIVE REPAIR, SEE TYPICAL SECTION ON SHEET FM-0.1

NOTES:

1. THE LOCATION OF THE EXISTING 10" SANITARY FORCE MAIN IS UNKNOWN. THE CONTRACTOR SHALL FIELD VERIFY THE EXISTING PIPE TO PERMIT THE INSTALLATION OF THE SPECIFIED PLUG TO ABANDON THE EXISTING PIPE.
2. FOOTAGES AND ODOT MATERIAL DESIGNATIONS ARE PROVIDED FOR PIPES LOCATED IN ODOT L/A R/W AS REQUIRED BY ODOT DISTRICT 7. MEASUREMENT AND PAYMENT WILL BE AS DEFINED IN SPECIFICATION SECTION 01010.
3. DISTANCES TO THE EDGE OF ASPHALT PAVEMENT ARE SHOWN FOR THE MINIMUM DISTANCE TO THE PIPE CENTERLINE ON EACH SHEET AND AT HORIZONTAL BENDS FOR WORK IN ODOT L/A R/W.
4. DEPTHS SHOWN ON THE PROFILE ARE THE MINIMUM FOR EACH SHEET WITH WORK SHOWN IN THE ODOT L/A R/W.
5. DISTANCES SHOWN TO L/A R/W ARE SHOWN TO THE ACCURACY AVAILABLE TO THE ENGINEER.
6. THE CONTRACTOR SHALL FIELD VERIFY THE DEPTH OF THE STORM SEWER TO PERMIT THE ENGINEER THE OPPORTUNITY TO ADJUST THE VERTICAL ALIGNMENT OF THE FORCE MAIN AS NECESSARY.

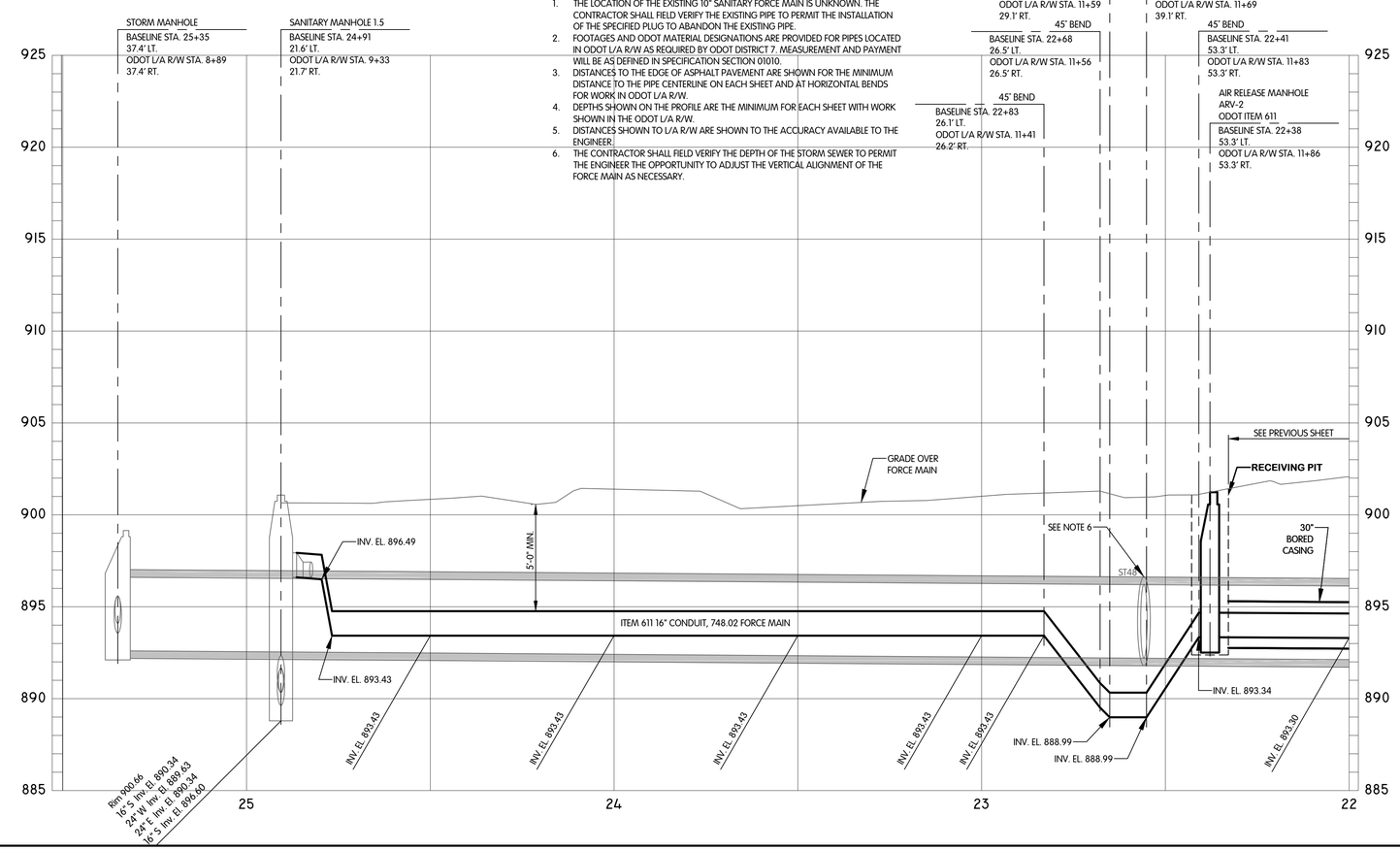

SOUTH BLACKHOOF STREET
SANITARY FORCEMAIN
STA. 22+00 TO 25+50
VALUE

CITY OF WAPAKONETA HARDIN PIKE FORCE MAIN REPLACEMENT

NO.	DATE	REVISIONS AFTER ISSUED FOR BID	BY
5			
4			
3			
2			
1			

Jones & Henry Engineers, Ltd.

Fluid thinking©.
www.JHeng.com

JOB NO.	963-7502.004
SCALE	1" = 20' HOR 1" = 4' VERT

THIS LINE SCALES 1" WHEN PLOTTED TO NOTED SCALE

DESIGNED	DRAWN	CHECKED
TAB	CAL	TAB

STATUS: ISSUED FOR BID

DATE: APRIL 2021

SHEET NO.

FM-1.5

11 OF 13

TOL-7502004.PP05
4/1/2021 10:39 AM
4/1/2021 10:39 AM

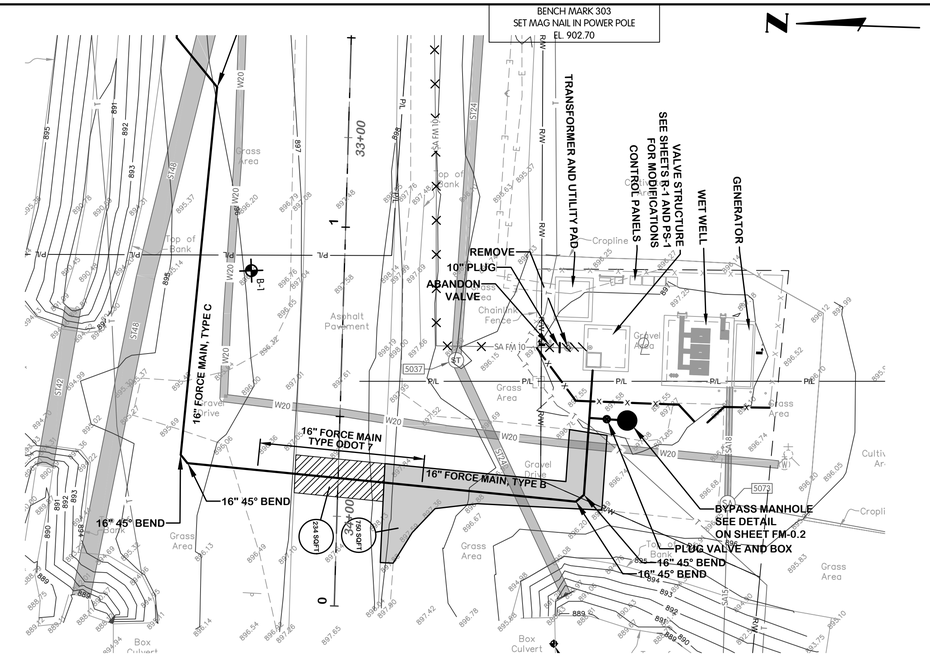

PUMP STATION ENTRANCE DRIVE

PAVEMENT LEGEND

- ASPHALT PAVEMENT REPAIR, SEE TYPICAL SECTION ON SHEET FM-0.1
- GRAVEL DRIVE REPAIR, SEE TYPICAL SECTION ON SHEET FM-0.1

NOTES:

1. FOOTAGES AND ODOT MATERIAL DESIGNATIONS ARE PROVIDED FOR PIPES LOCATED IN ODOT L/A R/W AS REQUIRED BY ODOT DISTRICT 7. MEASUREMENT AND PAYMENT WILL BE AS DEFINED IN SPECIFICATION SECTION 01010.
2. DISTANCES TO THE EDGE OF ASPHALT PAVEMENT ARE SHOWN FOR THE MINIMUM DISTANCE TO THE PIPE CENTERLINE ON EACH SHEET AND AT HORIZONTAL BENDS FOR WORK IN ODOT L/A R/W.
3. DEPTHS SHOWN ON THE PROFILE ARE THE MINIMUM FOR EACH SHEET WITH WORK SHOWN IN THE ODOT L/A R/W.
4. DISTANCES SHOWN TO L/A R/W ARE SHOWN TO THE ACCURACY AVAILABLE TO THE ENGINEER.
5. THE CONTRACTOR SHALL FIELD VERIFY THE LOCATION AND DEPTH OF THE 20" WATER MAIN PRIOR TO COMMENCING WORK ON THE FORCE MAIN TO PERMIT THE ENGINEER AN OPPORTUNITY TO ADJUST THE VERTICAL ALIGNMENT OF THE FORCE MAIN AS NECESSARY.

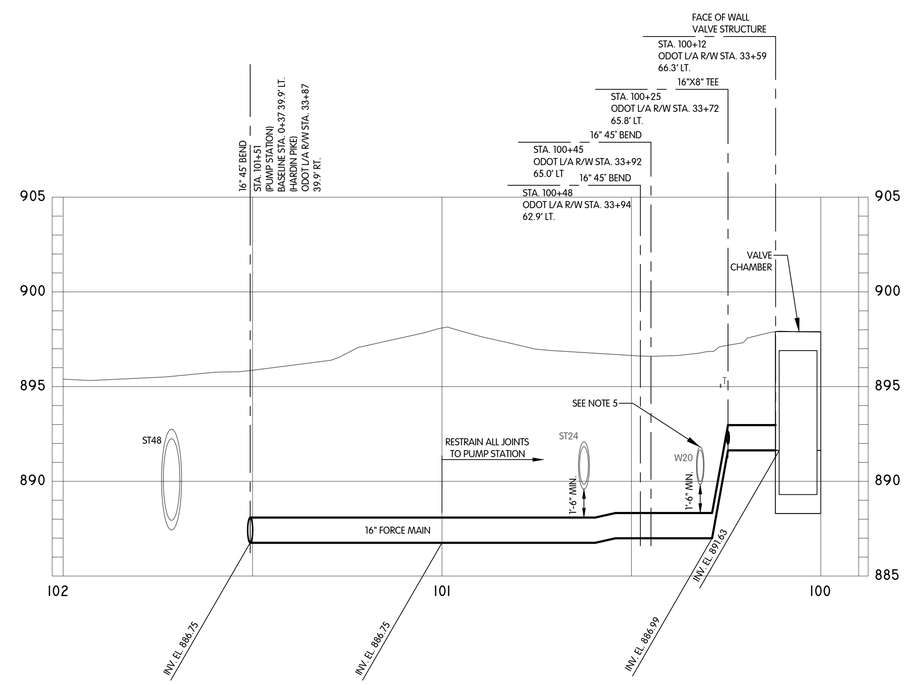

HARDIN PIKE ROAD
SANITARY FORCEMAIN
PLAN AND PROFILE
STA. 0+00 TO 1+50

CITY OF WAPAKONETA HARDIN PIKE FORCE MAIN REPLACEMENT

NO.	DATE	REVISIONS AFTER ISSUED FOR BID	BY
5			
4			
3			
2			
1			

Jones & Henry Engineers, Ltd.

Fluid thinking©.
www.JHeng.com

JOB NO.	963-7502.004
SCALE	1" = 20' HOR 1" = 4' VERT

THIS LINE SCALES 1" WHEN PLOTTED TO NOTED SCALE

DESIGNED	DRAWN	CHECKED
TAB	CAL	TAB

STATUS: ISSUED FOR BID

DATE: APRIL 2021

SHEET NO.

FM-1.6

12 OF 13

TCL-7502000.PP06
LAYOUT: FM-1.6
4/1/2021 10:40 AM

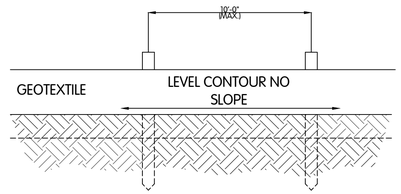

ELEVATION

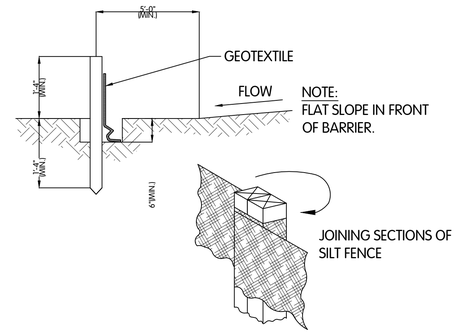

NOTES:

1. SILT FENCE SHALL BE CONSTRUCTED BEFORE UPSLOPE LAND DISTURBANCE BEGINS.

2. ALL SILT FENCE SHALL BE PLACED AS CLOSE TO THE CONTOUR AS POSSIBLE SO THAT WATER WILL NOT CONCENTRATE AT LOW POINTS IN THE FENCE AND SO THAT SMALL SWALES OR DEPRESSIONS WHICH MAY CARRY SMALL CONCENTRATED FLOWS TO THE SILT FENCE ARE DISSIPATED ALONG ITS LENGTH.

3. TO PREVENT WATER PONDED BY THE SILT FENCE FROM FLOWING AROUND THE ENDS, EACH END SHALL BE CONSTRUCTED UPSLOPE SO THAT THE ENDS ARE AT A HIGHER ELEVATION.

4. WHERE POSSIBLE, SILT FENCE SHALL BE PLACED ON THE FLATTEST AREA AVAILABLE.

5. WHERE POSSIBLE, VEGETATION SHALL BE PRESERVED FOR 5 FT. (OR AS MUCH AS POSSIBLE) UPSLOPE FROM THE SILT FENCE. IF VEGETATION IS REMOVED, IT SHALL BE REESTABLISHED WITHIN 7 DAYS FROM THE INSTALLATION OF THE FENCE.

6. SOIL STOCKPILES OR OTHER SOURCES OF SEDIMENT SHALL HAVE SILT FENCE PROTECTION.

7. THE SILT FENCE SHALL BE PLACED IN A TRENCH CUT A MINIMUM OF 6" DEEP. THE TRENCH SHALL BE CUT WITH A TRENCHER, CABLE LAYING MACHINE, OR OTHER SUITABLE DEVICE WHICH WILL ENSURE AN ADEQUATELY UNIFORM TRENCH DEPTH.

8. THE SILT FENCE SHALL BE PLACED WITH THE STAKES ON THE DOWN SLOPE SIDE OF THE GEOTEXTILE AND SO THAT 8" OF CLOTH ARE BELOW THE GROUND SURFACE. EXCESS MATERIAL SHALL LAY ON THE BOTTOM OF THE 6" DEEP TRENCH. THE TRENCH SHALL BE BACK FILLED AND COMPACTED.

9. SEAMS BETWEEN SECTIONS OF SILT FENCE SHALL BE OVERLAPPED WITH THE END STAKES OF EACH SECTION WRAPPED TOGETHER BEFORE DRIVING INTO THE GROUND.

10. MAINTENANCE-- SILT FENCE SHALL ALLOW RUNOFF TO PASS ONLY AS DIFFUSE FLOW THROUGH THE GEOTEXTILE. IF RUNOFF OVER TOPS THE SILT FENCE, FLOWS UNDER OR AROUND THE ENDS, OR IN ANY OTHER WAY BECOMES A CONCENTRATED FLOW, ONE OF THE FOLLOWING SHALL BE PERFORMED, AS APPROPRIATE:
    - A. THE LAYOUT OF THE SILT FENCE SHALL BE CHANGED.
    - B. ACCUMULATED SEDIMENT SHALL BE REMOVED.
    - C. OTHER PRACTICES SHALL BE INSTALLED.

CRITERIA FOR SILT FENCE MATERIALS:

1. FENCE POSTS - THE LENGTH SHALL BE A MINIMUM OF 32" LONG. WOOD POST WILL BE 2" X 2" HARDWOOD OF SOUND QUALITY. THE MAXIMUM SPACING BETWEEN POSTS SHALL BE 10 FT.

2. SILT FENCE FABRIC (SEE CHART BELOW):

FABRIC PROPERTIES	VALUES	TEST METHOD
GRAB TENSILE STRENGTH	90 LB. MINIMUM	ASTM D 1682
MULLEN BURST STRENGTH	190 P.S.I. MINIMUM	ASTM D 3786
SLURRY FLOW RATE	0.3 GAL./MIN./FT.^{2} MAX.	
EQUIVALENT OPENING SIZE	40-80	US STD. SIEVE CW-02215
ULTRAVIOLET RADIATION STABILITY	90% MINIMUM	ASTM-G-26

SILT FENCE

NTS

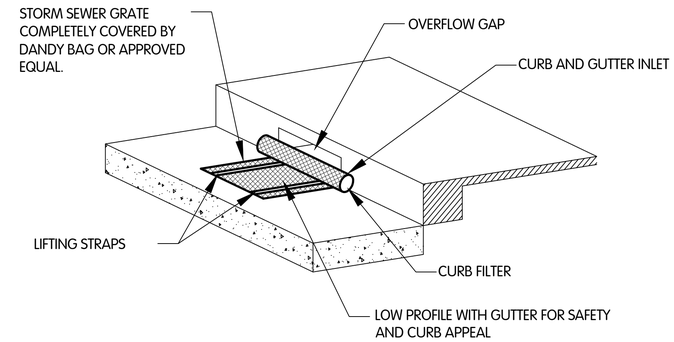

INLET PROTECTION FOR DRAINS WITH HOOD

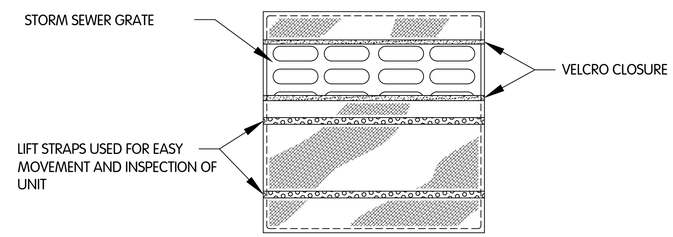

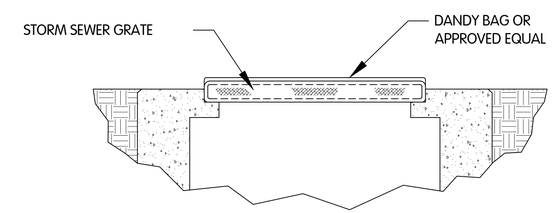

INLET PROTECTION FOR DRAINS WITHOUT HOOD

NOTES:

1. INLET PROTECTION SHALL BE CONSTRUCTED EITHER BEFORE UPSLOPE LAND DISTURBANCE BEGINS OR BEFORE THE STORM SEWER BECOMES ACTIVE IN THE CASE OF NEW CONSTRUCTION.

INLET PROTECTION FOR DRAINS WITH DANDY BAGS

NTS

EROSION CONTROL DETAILS

CITY OF WAPAKONETA HARDIN PIKE FORCE MAIN REPLACEMENT

NO.	DATE	REVISIONS AFTER ISSUED FOR BID	BY
5			
4			
3			
2			
1			

Jones & Henry Engineers, Ltd.

Fluid thinking©.
www.JHeng.com

JOB NO. 963-7502.004

SCALE AS NOTED

THIS LINE SCALES 1" WHEN PLOTTED TO NOTED SCALE

DESIGNED	DRAWN	CHECKED
TAB	BJD	TAB

STATUS: ISSUED FOR BID

DATE: APRIL 2021

SHEET NO.

EC-1

13 OF 13

T:\0L-75020\0LECO1
4/11/2021 10:40 AM
4/11/2021 10:40 AM