Jones & Henry Engineers, Ltd.

# Village of Whitehouse, Ohio

# Wabash Cannonball Trail Interceptor Sewer & Finzel Road Pump Station Rehabilitation

# ADDENDUM 4

November 4, 2020

Planholders of the Village of Whitehouse, Wabash Cannonball Trail Interceptor Sewer & Finzel Road Pump Station Rehabilitation are hereby notified of the following amendments to the Contract Documents. This Addendum is hereby made a part of the Contract Documents.

## REFERENCE NOTES

The following are changes to the bidding schedule:

- Sealed Bids for Wabash Cannonball Trail Interceptor Sewer, will be received by the Village of Whitehouse, at the 6925 Providence Street P.O. Box 2476, Whitehouse, Ohio 43571, until 11:00 AM, local time, on November 12, 2020, at which time they will be publicly opened and read.

- Bidders are reminded to review the required documentation to be submitted with the bid summarized in the Instructions to Bidders.

- Alignment changes have been made at the east end of Logan Street and Finzel Road. The new alignment is reflected in the reissued plan and profile sheets and surface restoration sheet. Modified quantities are reflected in the attached general summary sheet and new bid form.

- The Engineer is calling the bidders' attention to the additional note to remove and replace the guardrail at the end of Logan Street with ODOT guardrail and signage as specified on the plans. There is no separate bid item for the guardrail and signage work. This work is to be included incidental to the pay items for sewer pipe as noted in the changes to Item 01010 discussed in this Addendum.

## WAGE RATES

Davis Bacon Wage Rates are attached to Addendum 4.

## BID FORM

Replace Section C-410 with the attached Bid Form that includes the updated quantities related to the modified alignment on Logan Street.

## SPECIFICATIONS

*Page 01010-4, 2.01*

*Add the following Paragraph:*

*3103 Executive Parkway, Suite 300, Toledo, Ohio 43606 - 419.473.9611*

*"O. The removal and replacement of guardrails and the installation of end of the road signage as indicated on the plans is included in these Items."*

*Page 01010-4, 2.03, A*

*Replace Paragraph A with the following:*

*"A. Item 2a – 6-inch Lateral Sewer Connection, Type B and C."*

*Page 01010-5, 2.03*

*Add the following Paragraph AD:*

*"AD. Item 2ad – 15-inch Sanitary Sewer, Type C."*

*Page 01010-5, 2.04, B*

*Replace Paragraph B with the following:*

"B. The quantities to be paid under Items 2b through 2l, 2r, 2s, 2t 2y, 2z, 2aa, 2ab and 2ad will be the measured horizontal length of sewers constructed, removed or abandoned at the ground surface of the specified sizes and trench detail."

*Page 01010-8, 5.03, H*

*Add the following Paragraph H:*

*"H. Item 5h – Sanitary Sewer Manhole, Type II with Inside Drop."*

*Page 01010-9, 5.04, A*

*Replace Paragraph A with the following:*

"A. The quantities to be paid under Items 5a through 5e and 5h shall be the full compensation for each vertical foot of complete manhole. Measured height of manholes or drop connections, as built, measured from the invert of the deepest pipe to the top of the manhole casting at the ordered placement, to which will be added 1-foot allowance for the base."

*Page 01010-23*

*Add the following Paragraphs:*

***"ITEM 24***

***TREES***

***24.01 DESCRIPTION***

*A. Under this Item, the Contractor shall plant and maintain for 1-year the specified trees at locations as identified by the Owner.*

***24.02 WORK NOT INCLUDED***

*Not used.*

***24.03 DEFINITION OF ITEMS***

*A. Item 24 - Trees*

***24.04 MEASUREMENT & PAYMENT***

*A. The quantities to be paid for under Item 24 shall be full compensation for each tree planted in accordance with the Specifications and Drawings."*

*Page 1565-2, PART 4*

Add the following Paragraph 4.10

"**4.01 TEMPORARY PAVEMENT**

A. Temporary pavement placed on trench repairs that will remain in place for over 30 days shall include the specified permanent aggregate base and either a minimum of 3 inches of cold patch material (ODOT 448) or a minimum of 4 inches of concrete as specified in Section 02600."

*Page 02955-3, 3.02*

Remove the wording "pressure treated wood blocks" from paragraph *A*.

Insert Specification Section 02810 attached to this Addendum.

## DRAWINGS

*Sheet G-3 – General Summary*

Replace the sheet with the provided Sheet G-3 included with Addendum 4.

Sheet SA-0.1 – Sanitary Sewer Details.

Replace the sheet with the provide Sheet SA-0.1 included with Addendum 4.

*Sheet SA-1.1 – Wabash Cannonball Trail Sanitary Sewer Plan and Profile Sta. 0+00 to 5+50.*

Replace the sheet with the provided Sheet SA-1.1 included with Addendum 4.

*Sheet SA-1.2 – Wabash Cannonball Trail Sanitary Sewer Plan and Profile Sta. 5+50 to 11+00.*

Replace the sheet with the provided Sheet SA-1.2 included with Addendum 4.

*Sheet SA-1.3 – Wabash Cannonball Trail Sanitary Sewer Plan and Profile Sta. 11+00 to 16+50.*

Replace the sheet with the provided Sheet SA-1.3 included with Addendum 4.

*Sheet SA-1.4 – Wabash Cannonball Trail Sanitary Sewer Plan and Profile Sta. 16+50 to 22+00.*

Replace the sheet with the provided Sheet SA-1.4 included with Addendum 4.

*Sheet SA-1.5 – Wabash Cannonball Trail Sanitary Sewer Plan and Profile Sta. 22+00 to 27+50.*

Replace the sheet with the provided Sheet SA-1.5 included with Addendum 4.

*Sheet SA-1.6 – Wabash Cannonball Trail Sanitary Sewer Plan and Profile Sta. 27+50 to 33+00.*

Replace the sheet with the provided Sheet SA-1.6 included with Addendum 4.

*Sheet SA-1.7 – Wabash Cannonball Trail Sanitary Sewer Plan and Profile Sta. 33+00 to 38+50.*

Replace the sheet with the provided Sheet SA-1.7 included with Addendum 4.

*Sheet SA-1.8 – Wabash Cannonball Trail Sanitary Sewer Plan and Profile Sta. 38+50 to 44+00.*

Replace the sheet with the provided Sheet SA-1.8 included with Addendum 4.

*Sheet SA-1.9 – Wabash Cannonball Trail Sanitary Sewer Plan and Profile Sta. 44+00 to 49+00.*

Replace the sheet with the provided Sheet SA-1.9 included with Addendum 4.

*Sheet SA-1.10 – Wabash Cannonball Trail Sanitary Sewer Plan and Profile Sta. 49+50 to 55+00.*

Replace the sheet with the provided Sheet SA-1.10 included with Addendum 4.

*Sheet SA-1.11 – Wabash Cannonball Trail Sanitary Sewer Plan and Profile Sta. 55+00 to 60+21.*

Replace the sheet with the provided Sheet SA-1.11 included with Addendum 4.

*Sheet SR-1 – Field Avenue, Logan Street and Wabash Cannonball Trail Surface Restoration Plans.*

Replace the sheet with the provided Sheet SR-1 included with Addendum 4. A OM4-1 sign detail and guardrail detail have been added to this sheet.

*Sheet SR-2 - Field Avenue, Logan Street and Wabash Cannonball Trail Surface Restoration Plans*

Replace the sheet with the provided Sheet SR-2 included with Addendum 4. A tree planting detail has been added to this sheet.

## QUESTIONS

The following questions were submitted to the Engineer. The answers provided below are for the clarification of the Bidders' questions.

***Question #16 – What is the high point along the force mains?***

Per Record Plans, the high point of the 14-inch force main located at a point 19,700-feet from Finzel Road Pump Station west of Black Road.

Attachments: C-410

Specification Section 02810 - Trees

G-3 General Summary

SA-0.1

SA-1.1

SA-1.2

SA-1.3

SA-1.4

SA-1.5

SA-1.6

SA-1.7

SA-1.8

SA-1.9

SA-1.10

SA-1.11

SR-1

SR-2

Davis-Bacon Wage Rates

**RECEIPT OF THIS ADDENDUM MUST BE ACKNOWLEDGED ON PAGE C-410 - 1 OF THE BID.**

# BID FORM

VILLAGE OF WHITEHOUSE, OHIO

WABASH CANNONBALL TRAIL INTERCEPTOR SEWER

& FINZEL ROAD PUMP STATION REHABILITATION

## ARTICLE 1 – BID RECIPIENT

1.01 This Bid is submitted to:

Village of Whitehouse

6925 Providence Street

Whitehouse, Ohio 43571

1.02 The undersigned Bidder proposes and agrees, if this Bid is accepted, to enter into an Agreement with Owner in the form included in the Bidding Documents to perform all Work as specified or indicated in the Bidding Documents for the prices and within the times indicated in this Bid and in accordance with the other terms and conditions of the Bidding Documents.

## ARTICLE 2 – BIDDER'S ACKNOWLEDGEMENTS

2.01 Bidder accepts all of the terms and conditions of the Instructions to Bidders, including without limitation those dealing with the disposition of Bid security. This Bid will remain subject to acceptance for 90 days after the Bid opening, or for such longer period of time that Bidder may agree to in writing upon request of Owner.

## ARTICLE 3 – BIDDER'S REPRESENTATIONS

3.01 In submitting this Bid, Bidder represents that:

A. Bidder has examined and carefully studied the Bidding Documents, and any data and reference items identified in the Bidding Documents, and hereby acknowledges receipt of the following Addenda:

| Addendum No. | Addendum, Date |
|---|---|
| _____ | _____ |
| _____ | _____ |
| _____ | _____ |
| _____ | _____ |

B. Bidder has visited the Site, conducted a thorough, alert visual examination of the Site and adjacent areas, and become familiar with and satisfied itself as to the general, local, and Site conditions that may affect cost, progress, and performance of the Work.

C. Bidder is familiar with and has satisfied itself as to all Laws and Regulations that may affect cost, progress, and performance of the Work.

D. Bidder has carefully studied all: (1) reports of explorations and tests of subsurface conditions at or adjacent to the Site and all drawings of physical conditions relating to existing surface or subsurface structures at the Site that have been identified in the Supplementary Conditions, especially with respect to Technical Data in such reports and drawings, and (2) reports and drawings relating to Hazardous Environmental Conditions, if any, at or adjacent to the Site that have been identified in the Supplementary Conditions, especially with respect to Technical Data in such reports and drawings.

E. Bidder has considered the information known to Bidder itself; information commonly known to contractors doing business in the locality of the Site; information and observations obtained from visits to the Site; the Bidding Documents; and any Site-related reports and drawings identified in the Bidding Documents, with respect to the effect of such information, observations, and documents on (1) the cost, progress, and performance of the Work; (2) the means, methods, techniques, sequences, and procedures of construction to be employed by Bidder; and (3) Bidder's safety precautions and programs.

F. Bidder agrees, based on the information and observations referred to in the preceding paragraph, that no further examinations, investigations, explorations, tests, studies, or data are necessary for the determination of this Bid for performance of the Work at the price bid and within the times required, and in accordance with the other terms and conditions of the Bidding Documents.

G. Bidder is aware of the general nature of work to be performed by Owner and others at the Site that relates to the Work as indicated in the Bidding Documents.

H. Bidder has given Engineer written notice of all conflicts, errors, ambiguities, or discrepancies that Bidder has discovered in the Bidding Documents and confirms that the written resolution thereof by Engineer is acceptable to Bidder.

I. The Bidding Documents are generally sufficient to indicate and convey understanding of all terms and conditions for the performance and furnishing of the Work.

J. The submission of this Bid constitutes an incontrovertible representation by Bidder that Bidder has complied with every requirement of this Article, and that without exception the Bid and all prices in the Bid are premised upon performing and furnishing the Work required by the Bidding Documents.

**ARTICLE 4 – BIDDER'S CERTIFICATION**

4.01 Bidder certifies that:

A. This Bid is genuine and not made in the interest of or on behalf of any undisclosed individual or entity and is not submitted in conformity with any collusive agreement or rules of any group, association, organization, or corporation;

B. Bidder has not directly or indirectly induced or solicited any other Bidder to submit a false or sham Bid;

C. Bidder has not solicited or induced any individual or entity to refrain from bidding; and

D. Bidder has not engaged in corrupt, fraudulent, collusive, or coercive practices in competing for the Contract. For the purposes of this Paragraph 4.01.D:

1. "corrupt practice" means the offering, giving, receiving, or soliciting of anything of value likely to influence the action of a public official in the bidding process;

2. "fraudulent practice" means an intentional misrepresentation of facts made (a) to influence the bidding process to the detriment of Owner, (b) to establish bid prices at artificial non-competitive levels, or (c) to deprive Owner of the benefits of free and open competition;

3. "collusive practice" means a scheme or arrangement between two or more Bidders, with or without the knowledge of Owner, a purpose of which is to establish bid prices at artificial, non-competitive levels; and

4. "coercive practice" means harming or threatening to harm, directly or indirectly, persons or their property to influence their participation in the bidding process or affect the e execution of the Contract.

**ARTICLE 5 – BASIS OF BID**

5.01 Bidder will complete the Work in accordance with the Contract Documents for unit prices indicated on the following price(s):

## UNIT PRICE BID

Bidder acknowledges that (1) each Bid Unit Price includes an amount considered by Bidder to be adequate to cover Contractor's overhead and profit for each separately identified item, and (2) estimated quantities are not guaranteed, and are solely for the purpose of comparison of Bids, and final payment for all unit price Bid items will be based on actual quantities, determined as provided in the Contract Documents.

| Item No. | Description | Estimated Amount | Unit | Unit Price in Numbers | | Unit Price in Words | Total Estimated Cost of Item | |
|---|---|---|---|---|---|---|---|---|
| 1 | Mobilization and Demobilization | 1 | LS | | | | | |
| 2a | 6-inch Lateral Sewer Connection, Type B and C | 3 | EA | | | | | |
| 2b | 8-inch Sanitary Sewer, Type B | 56 | LF | | | | | |
| 2c | 10-inch Sanitary Sewer, Type B | 15 | LF | | | | | |
| 2d | 12-inch Sanitary Sewer, Type B | 98 | LF | | | | | |
| 2e | 14-inch Sanitary Sewer, Type B | 43 | LF | | | | | |
| 2f | 15-inch Sanitary Sewer, Type B | 30 | LF | | | | | |
| 2g | 18-inch Sanitary Sewer, Type B | 292 | LF | | | | | |
| 2h | 24-inch Sanitary Sewer, Type B (Less than or equal to 20-feet Deep) | 756 | LF | | | | | |

| Item No. | Description | Estimated Amount | Unit | Unit Price in Numbers | | Unit Price in Words | Total Estimated Cost of Item | |
|---|---|---|---|---|---|---|---|---|
| 2i | 24-inch Sanitary Sewer, Type B (Greater than 20-feet Deep) | 725 | LF | | | | | |
| 2j | 24-inch Sanitary Sewer, Type C (Less than or equal to 20-feet Deep) | 3899 | LF | | | | | |
| 2k | 24-inch Sanitary Sewer, Type C (Greater than 20-feet Deep) | 1663 | LF | | | | | |
| 2l | 24-inch DIP Sanitary Sewer in 42-inch Bored Casing | 291 | LF | | | | | |
| 2m | 8-inch Sanitary Sewer Connection to Existing | 2 | EA | | | | | |
| 2n | 10-inch Sanitary Sewer Connection to Existing | 1 | EA | | | | | |
| 2o | 12-inch Sanitary Sewer Connection to Existing | 3 | EA | | | | | |
| 2p | 15-inch Sanitary Sewer Connection to Existing | 3 | EA | | | | | |
| 2q | 24-inch Sanitary Sewer Connection to Existing | 1 | EA | | | | | |

| Item No. | Description | Estimated Amount | Unit | Unit Price in Numbers | | Unit Price in Words | Total Estimated Cost of Item | |
|---|---|---|---|---|---|---|---|---|
| 2r | Sewer Pipe Repair, Less Than 15-inches in Diameter | 50 | LF | | | | | |
| 2s | 8-inch Force Main Removed, Type B | 60 | LF | | | | | |
| 2t | 12-inch Sanitary Sewer Removed, Type B | 7 | LF | | | | | |
| 2u | 4-inch Plug | 4 | EA | | | | | |
| 2v | 8-inch Plug | 13 | EA | | | | | |
| 2w | 12-inch Plug | 6 | EA | | | | | |
| 2x | 15-inch Plug | 1 | EA | | | | | |
| 2y | Sanitary Sewer Abandoned | 659 | LF | | | | | |
| 2z | 8-inch Storm Sewer, Type C | 33 | LF | | | | | |
| 2aa | 18-inch Storm Sewer, Type C | 65 | LF | | | | | |
| 2ab | 36-inch Storm Sewer, Type C | 680 | LF | | | | | |
| 2ac | 36-inch Culvert Repair, Type B | 25 | LF | | | | | |

| Item No. | Description | Estimated Amount | Unit | Unit Price in Numbers | | Unit Price in Words | Total Estimated Cost of Item | |
|---|---|---|---|---|---|---|---|---|
| 2ad | 15-inch Sanitary Sewer, Type C | 45 | LF | | | | | |
| 3a | Tapping Sleeve, Valve and Manhole for Bypass Connection to Force Main | 1 | EA | | | | | |
| 3b | 14-inch Inserting Valve and Box | 1 | EA | | | | | |
| 3c | 8-inch Valve and Box Abandoned | 4 | EA | | | | | |
| 4 | Nyloplast Catch Basin | 2 | EA | | | | | |
| 5a | Sanitary Sewer Manhole, Type I | 60 | VLF | | | | | |
| 5b | Sanitary Sewer Manhole, Type II | 360 | VLF | | | | | |
| 5c | Sanitary Sewer Manhole, Type II with Drop | 41 | VLF | | | | | |
| 5d | Sanitary Sewer Manhole, Type III | 23 | VLF | | | | | |
| 5e | Storm Sewer Manhole, Type III | 7 | VLF | | | | | |
| 5f | Manhole Abandoned | 3 | EA | | | | | |
| 5g | Manhole Removed | 4 | EA | | | | | |

| Item No. | Description | Estimated Amount | Unit | Unit Price in Numbers | | Unit Price in Words | Total Estimated Cost of Item | |
|---|---|---|---|---|---|---|---|---|
| 5h | Sanitary Sewer Manhole, Type II with Inside Drop | 23 | VLF | | | | | |
| 6a | ODOT Item 202 Pavement and Base Removed | 2824 | SY | | | | | |
| 6b | ODOT Item 202 Driveway and Sidewalk Pavement Removed | 90 | SY | | | | | |
| 6c | ODOT Item 254 Pavement Planing | 680 | SY | | | | | |
| 7a | ODOT Item 304 Aggregate Base | 963 | CY | | | | | |
| 7b | ODOT Item 301 Asphalt Concrete Base | 153 | CY | | | | | |
| 7c | ODOT Item 407 Tack Coat | 348 | GAL | | | | | |
| 7d | ODOT Item 441 Asphalt Concrete Intermediate Course, Type 2 (448) | 142 | CY | | | | | |
| 7e | ODOT Item 441 Asphalt Concrete Surface Course, Type 1 (448) | 142 | CY | | | | | |
| 7f | ODOT Item 204 Subgrade Compaction | 2904 | SY | | | | | |
| 7g | Temporary Pavement Repair | 2904 | SY | | | | | |

| Item No. | Description | Estimated Amount | Unit | Unit Price in Numbers | | Unit Price in Words | Total Estimated Cost of Item | |
|---|---|---|---|---|---|---|---|---|
| 8a | 4-inch Concrete Sidewalk | 320 | SF | | | | | |
| 8b | 6-inch and 8-inch Concrete Sidewalk and Curb Ramp with Detectable Warning Surface | 130 | SF | | | | | |
| 8c | 8-inch Concrete Driveway | 50 | SY | | | | | |
| 9a | Curb or Curb and Gutter Removed | 810 | LF | | | | | |
| 9b | Concrete Curb and Gutter, Type 2 | 810 | LF | | | | | |
| 10 | Maintenance of Traffic | 1 | LS | | | | | |
| 11 | Storm Water Pollution Prevention | 1 | LS | 10,000 | 00 | Ten Thousand and 00/100 Dollars | $10,000 | 00 |
| 12 | Clearing and Grubbing | 1 | LS | | | | | |
| 13 | Post-Construction Sewer Televising 8-inch Through 24-inch Sewer | 6522 | LF | | | | | |
| 14a | Blue Grass Farms Pump Station Demolition | 1 | LS | | | | | |
| 14b | Field Avenue Pump Station Demolition | 1 | LS | | | | | |

| Item No. | Description | Estimated Amount | Unit | Unit Price in Numbers | | Unit Price in Words | Total Estimated Cost of Item | |
|---|---|---|---|---|---|---|---|---|
| 15 | Remove and Replace Pedestrian Signal | 1 | EA | | | | | |
| 16 | Pavement Markings for Cemetery Road | 1 | LS | | | | | |
| 17 | Finzel Road Pump Station Rehabilitation | 1 | LS | | | | | |
| 18 | Bypass Pumping | 6 | WEEK | | | | | |
| 19a | Water Main Repair, Less Than or Equal to 12-inch Diameter | 40 | LF | | | | | |
| 19b | Water Service Repair | 2 | EA | | | | | |
| 20 | Topsoil Stripped, Stockpiled and Placed | 1 | LS | | | | | |
| 21 | Dump Rock Fill, Type D | 90 | CY | | | | | |
| 22 | Ditch Enclosure Fill | 1990 | CY | | | | | |
| 23 | Video Recording of the Zone of Influence | 1 | LS | | | | | |
| 24 | Trees | 10 | EA | | | | | |
| **Total Base Bid Amount (Not Including Alternate Items)** | | | | | | | | |

| Item No. | Description | Estimated Amount | Unit | Unit Price in Numbers | | Unit Price in Words | Total Estimated Cost of Item | |
|---|---|---|---|---|---|---|---|---|
| | **Alternate 1*** **(Not Included in Base Bid Items)** | | | | | | | |
| 2i-alt | 24-inch Sanitary Sewer, Type B (Greater than 20-feet Deep) | 185 | LF | | | | | |
| **Total Alternate 1 (Not Including Base Bid)** | | | | | | | | |
| | **Alternate 2*** **(Not Included in Base Bid Items)** | | | | | | | |
| 2l-alt | 24-inch DIP Sanitary Sewer in 42-inch Bored Casing | 185 | LF | | | | | |
| **Total Alternate 2 (Not Including Base Bid)** | | | | | | | | |

* One of the Alternate Bids is required. Bidders may provide bids for both alternates.

**ARTICLE 6 – TIME OF COMPLETION**

6.01 Bidder agrees that the Work will be substantially complete and will be completed and ready for final payment in accordance with Paragraph 15.06 of the General Conditions on or before the dates or within the number of calendar days indicated in the Agreement.

6.02 Bidder accepts the provisions of the Agreement as to liquidated damages.

**ARTICLE 7 – ATTACHMENTS TO THIS BID**

7.01 The following documents are submitted with and made a condition of this Bid:

A. Required Bid security;

B. Evidence of authority to do business in the state of the Project;

C. Required Bidder Qualification Statement with supporting data.

**ARTICLE 8 – DEFINED TERMS**

8.01 The terms used in this Bid with initial capital letters have the meanings stated in the Instructions to Bidders, the General Conditions, and the Supplementary Conditions.

**ARTICLE 9 – BID SUBMITTAL**

BIDDER: *[Indicate correct name of bidding entity]*

_____

By:
*[Signature]* _____

*[Printed name]* _____
*(If Bidder is a corporation, a limited liability company, a partnership, or a joint venture, attach evidence of authority to sign.)*

Attest:
*[Signature]* _____

*[Printed name]* _____

Title: _____

Submittal Date: _____

Address for giving notices:

_____

_____

_____

_____

_____

Telephone Number: _____

Email Address: _____

Contact Name: _____

_____

Bidder's License No.: _____
*(where applicable)*

PERSONAL PROPERTY TAX AFFIDAVIT

STATE OF OHIO )
)ss.
COUNTY OF _____)

_____, being first duly sworn, deposes and says as follows: answering whichever is applicable by placing an "X" before items 1 or 2.

1. ( ) We are not charged with any delinquent personal property taxes on the general tax list of personal property in _____ County, Ohio.

2. ( ) We are charged with delinquent personal property taxes on the general tax list of _____County, Ohio including unpaid penalties and interest in the amount of $_____.

_____
Bidder

By: _____

Title: _____

Sworn and subscribed before me this _____ day of _____ 20 _____.

_____
Notary Public in and for

_____ State

My Commission Expires:

_____ 20_____

# SECTION 02810
# TREES

## PART 1 GENERAL

### 1.01 SCOPE

A. This Section includes protection, removal, disposal, and replacement of trees encountered in construction of the Project as specified herein and directed.

B. Trees planted in easements shall be included in this Section.

## PART 2 PRODUCTS

### 2.01 MATERIALS

A. Trees shall be 6-foot tall Norway Spruce Trees or approved equal.

## PART 3 EXECUTION

### 3.01 COORDINATION

A. The Owner will designate, mark, and record the location, size, and variety of trees within the Work limits that must be protected or removed and replaced.

B. Any tree not included in the above damaged by the Contractor's operations to the extent that it must be removed shall be removed and replaced at the Contractor's expense.

### 3.02 INSTALLATION

A. Planting shall be in accordance with the applicable portions of ODOT Item 661.

### 3.03 PROTECTION

A. Should any of the planted trees die after final acceptance of the Work, but during the one-year maintenance bond period, such trees shall be replaced in kind and size as nearly as possible by the Contractor at his expense.

## PART 4 SPECIAL PROVISIONS

None

END OF SECTION

TOL-7448026ESNSIM
11/4/2020 2:37 PM
11/4/2020 2:37 PM

| Item No. | Plan Quantity | Contingency Quantity | Grand Total | Unit | Description | SA-1.1 | SA-1.2 | SA-1.3 | SA-1.4 | SA-1.5 | SA-1.6 | SA-1.7 | SA-1.8 | SA-1.9 | SA-1.10 | SA-1.11 | SA-2.1 | SA-3.1 | SA-4.1 | SA-5.1 | ST-1.1 | ST-1.2 | SR-1 | SR-2 |
|---|---|---|---|---|---|---|---|---|---|---|---|---|---|---|---|---|---|---|---|---|---|---|---|---|
| 1 | 1 | 0 | 1 | LS | Mobilization and Demobilization | 1 | 0 | 0 | 0 | 0 | 0 | 0 | 0 | 0 | 0 | 0 | 0 | 0 | 0 | 0 | 0 | 0 | 0 | 0 |
| 2a | 3 | 0 | 3 | EA | 6-Inch Lateral Sewer Connection, Type B and C | 2 | 0 | 0 | 0 | 0 | 0 | 0 | 0 | 0 | 0 | 1 | 0 | 0 | 0 | 0 | 0 | 0 | 0 | 0 |
| 2b | 51 | 5 | 56 | LF | 8-Inch Sanitary Sewer, Type B | 0 | 39 | 0 | 0 | 0 | 0 | 0 | 0 | 0 | 0 | 0 | 0 | 0 | 12 | 0 | 0 | 0 | 0 | 0 |
| 2c | 10 | 5 | 15 | LF | 10-Inch Sanitary Sewer, Type B | 0 | 0 | 0 | 0 | 0 | 0 | 0 | 0 | 0 | 0 | 0 | 10 | 0 | 0 | 0 | 0 | 0 | 0 | 0 |
| 2d | 93 | 5 | 98 | LF | 12-Inch Sanitary Sewer, Type B | 13 | 0 | 0 | 0 | 0 | 0 | 0 | 0 | 0 | 0 | 0 | 68 | 0 | 12 | 0 | 0 | 0 | 0 | 0 |
| 2e | 43 | 0 | 43 | LF | 14-Inch Sanitary Sewer, Type B | 0 | 0 | 0 | 0 | 0 | 0 | 0 | 0 | 0 | 0 | 0 | 0 | 0 | 0 | 43 | 0 | 0 | 0 | 0 |
| 2f | 25 | 5 | 30 | LF | 15-Inch Sanitary Sewer, Type B | 0 | 0 | 0 | 0 | 0 | 0 | 0 | 0 | 0 | 0 | 0 | 12 | 0 | 0 | 13 | 0 | 0 | 0 | 0 |
| 2g | 292 | 0 | 292 | LF | 18-Inch Sanitary Sewer, Type B | 0 | 0 | 0 | 0 | 0 | 0 | 0 | 0 | 0 | 0 | 0 | 0 | 266 | 26 | 0 | 0 | 0 | 0 | 0 |
| 2h | 751 | 5 | 756 | LF | 24-Inch Sanitary Sewer, Type B (Less than or equal to 20-feet Deep) | 537 | 214 | 0 | 0 | 0 | 0 | 0 | 0 | 0 | 0 | 0 | 0 | 0 | 0 | 0 | 0 | 0 | 0 | 0 |
| 2i | 720 | 5 | 725 | LF | 24-Inch Sanitary Sewer, Type B (Greater than 20-Feet Deep) | 0 | 0 | 0 | 0 | 0 | 0 | 0 | 0 | 448 | 272 | 0 | 0 | 0 | 0 | 0 | 0 | 0 | 0 | 0 |
| 2j | 3889 | 10 | 3899 | LF | 24-Inch Sanitary Sewer, Type C (Less than or equal to 20-Feet Deep) | 0 | 336 | 550 | 550 | 550 | 550 | 550 | 511 | 0 | 25 | 267 | 0 | 0 | 0 | 0 | 0 | 0 | 0 | 0 |
| 2k | 163 | 0 | 163 | LF | 24-Inch Sanitary Sewer, Type C (Greater than 20-Feet Deep) | 0 | 0 | 0 | 0 | 0 | 0 | 0 | 39 | 0 | 10 | 114 | 0 | 0 | 0 | 0 | 0 | 0 | 0 | 0 |
| 2l | 291 | 0 | 291 | LF | 24-Inch DIP Sanitary Sewer in 42-inch Bored Casing | 0 | 0 | 0 | 0 | 0 | 0 | 0 | 0 | 0 | 243 | 48 | 0 | 0 | 0 | 0 | 0 | 0 | 0 | 0 |
| 2m | 2 | 0 | 2 | EA | 8-Inch Sanitary Sewer Connection to Existing | 0 | 1 | 0 | 0 | 0 | 0 | 0 | 0 | 0 | 0 | 0 | 0 | 0 | 1 | 0 | 0 | 0 | 0 | 0 |
| 2n | 1 | 0 | 1 | EA | 10-Inch Sanitary Sewer Connection to Existing | 0 | 0 | 0 | 0 | 0 | 0 | 0 | 0 | 0 | 0 | 0 | 1 | 0 | 0 | 0 | 0 | 0 | 0 | 0 |
| 2o | 3 | 0 | 3 | EA | 12-Inch Sanitary Sewer Connection to Existing | 1 | 0 | 0 | 0 | 0 | 0 | 0 | 0 | 0 | 0 | 0 | 1 | 0 | 1 | 0 | 0 | 0 | 0 | 0 |
| 2p | 3 | 0 | 3 | EA | 15-Inch Sanitary Sewer Connection to Existing | 0 | 0 | 0 | 0 | 0 | 0 | 0 | 0 | 0 | 0 | 0 | 1 | 0 | 0 | 2 | 0 | 0 | 0 | 0 |
| 2q | 1 | 0 | 1 | EA | 24-Inch Sanitary Sewer Connection to Existing | 0 | 0 | 0 | 0 | 0 | 0 | 0 | 0 | 0 | 0 | 1 | 0 | 0 | 0 | 0 | 0 | 0 | 0 | 0 |
| 2r | 0 | 50 | 50 | LF | Sewer Pipe Repair, Less Than 15-Inches in Diameter | 0 | 0 | 0 | 0 | 0 | 0 | 0 | 0 | 0 | 0 | 0 | 0 | 0 | 0 | 0 | 0 | 0 | 0 | 0 |
| 2s | 22 | 38 | 60 | LF | 8-Inch Force Main Removed, Type B | 0 | 22 | 0 | 0 | 0 | 0 | 0 | 0 | 0 | 0 | 0 | 0 | 0 | 0 | 0 | 0 | 0 | 0 | 0 |
| 2t | 7 | 0 | 7 | LF | 12-Inch Sanitary Sewer Removed, Type B | 7 | 0 | 0 | 0 | 0 | 0 | 0 | 0 | 0 | 0 | 0 | 0 | 0 | 0 | 0 | 0 | 0 | 0 | 0 |
| 2u | 4 | 0 | 4 | EA | 4-Inch Plug | 0 | 0 | 0 | 0 | 0 | 0 | 0 | 0 | 2 | 0 | 0 | 0 | 2 | 0 | 0 | 0 | 0 | 0 | 0 |
| 2v | 13 | 0 | 13 | EA | 8-Inch Plug | 1 | 4 | 0 | 0 | 4 | 0 | 0 | 4 | 0 | 0 | 0 | 0 | 0 | 0 | 0 | 0 | 0 | 0 | 0 |
| 2w | 6 | 0 | 6 | EA | 12-Inch Plug | 1 | 0 | 0 | 0 | 0 | 0 | 0 | 0 | 2 | 2 | 1 | 0 | 0 | 0 | 0 | 0 | 0 | 0 | 0 |
| 2x | 1 | 0 | 1 | EA | 15-Inch Plug | 1 | 0 | 0 | 0 | 0 | 0 | 0 | 0 | 0 | 0 | 0 | 0 | 0 | 0 | 0 | 0 | 0 | 0 | 0 |
| 2y | 659 | 0 | 659 | LF | Sanitary Sewer Abandoned | 556 | 103 | 0 | 0 | 0 | 0 | 0 | 0 | 0 | 0 | 0 | 0 | 0 | 0 | 0 | 0 | 0 | 0 | 0 |
| 2z | 28 | 5 | 33 | LF | 8-Inch Storm Sewer, Type C | 0 | 0 | 0 | 0 | 0 | 0 | 0 | 0 | 0 | 0 | 0 | 0 | 0 | 0 | 28 | 0 | 0 | 0 | 0 |
| 2aa | 65 | 0 | 65 | LF | 18-Inch Storm Sewer, Type C | 0 | 0 | 0 | 0 | 0 | 0 | 0 | 0 | 0 | 0 | 65 | 0 | 0 | 0 | 0 | 0 | 0 | 0 | 0 |
| 2ab | 670 | 10 | 680 | LF | 36-Inch Storm Sewer, Type C | 0 | 0 | 0 | 0 | 0 | 0 | 0 | 0 | 0 | 0 | 0 | 0 | 0 | 0 | 539 | 131 | 0 | 0 | 0 |
| 2ac | 21 | 4 | 25 | LF | 36-Inch Culvert Repair, Type B | 0 | 0 | 0 | 0 | 0 | 0 | 0 | 0 | 0 | 0 | 0 | 0 | 21 | 0 | 0 | 0 | 0 | 0 | 0 |
| 2ad | 40 | 5 | 45 | LF | 15-Inch Sanitary Sewer, Type C | 0 | 0 | 10 | 10 | 0 | 10 | 10 | 0 | 0 | 0 | 0 | 0 | 0 | 0 | 0 | 0 | 0 | 0 | 0 |
| 3a | 1 | 0 | 1 | EA | Tapping Sleeve, Valve and Manhole for Bypass Connection to Force Main | 0 | 0 | 0 | 0 | 0 | 0 | 0 | 0 | 0 | 0 | 0 | 0 | 0 | 0 | 0 | 0 | 0 | 0 | 0 |
| 3b | 1 | 0 | 1 | EA | 14-Inch Inserting Valve and Box | 0 | 0 | 0 | 0 | 0 | 0 | 0 | 0 | 0 | 0 | 0 | 0 | 0 | 0 | 0 | 0 | 0 | 0 | 0 |
| 3c | 4 | 0 | 4 | EA | 8-Inch Valve and Box Abandoned | 2 | 0 | 0 | 0 | 0 | 0 | 0 | 0 | 2 | 0 | 0 | 0 | 0 | 0 | 0 | 0 | 0 | 0 | 0 |
| 4 | 2 | 0 | 2 | EA | Nyloplast Catch Basin | 0 | 0 | 0 | 0 | 0 | 0 | 0 | 0 | 0 | 0 | 0 | 0 | 0 | 0 | 2 | 0 | 0 | 0 | 0 |
| 5a | 55 | 5 | 60 | VLF | Sanitary Sewer Manhole, Type I | 0 | 0 | 0 | 0 | 0 | 0 | 0 | 0 | 0 | 0 | 0 | 17 | 20 | 18 | 0 | 0 | 0 | 0 | 0 |
| 5b | 355 | 5 | 360 | VLF | Sanitary Sewer Manhole, Type II | 36 | 52 | 18 | 35 | 18 | 18 | 37 | 19 | 69 | 44 | 9 | 0 | 0 | 0 | 0 | 0 | 0 | 0 | 0 |
| 5c | 42 | 0 | 42 | VLF | Sanitary Sewer Manhole, Type II with Drop | 20 | 0 | 0 | 0 | 0 | 0 | 0 | 0 | 22 | 0 | 0 | 0 | 0 | 0 | 0 | 0 | 0 | 0 | 0 |
| 5d | 23 | 0 | 23 | VLF | Sanitary Sewer Manhole, Type III | 0 | 0 | 0 | 0 | 0 | 0 | 0 | 0 | 0 | 0 | 23 | 0 | 0 | 0 | 0 | 0 | 0 | 0 | 0 |
| 5e | 7 | 0 | 7 | VLF | Storm Sewer Manhole, Type III | 0 | 0 | 0 | 0 | 0 | 0 | 0 | 0 | 0 | 0 | 0 | 0 | 0 | 0 | 7 | 0 | 0 | 0 | 0 |
| 5f | 3 | 0 | 3 | EA | Manhole Abandoned | 2 | 1 | 0 | 0 | 0 | 0 | 0 | 0 | 0 | 0 | 0 | 0 | 0 | 0 | 0 | 0 | 0 | 0 | 0 |
| 5g | 4 | 0 | 4 | EA | Manhole Removed | 2 | 0 | 0 | 0 | 0 | 0 | 0 | 0 | 0 | 0 | 1 | 0 | 0 | 1 | 0 | 0 | 0 | 0 | 0 |
| 5h | 23 | 0 | 23 | VLF | Sanitary Sewer Manhole, Type II with Inside Drop | 0 | 0 | 0 | 0 | 0 | 0 | 0 | 0 | 0 | 0 | 23 | 0 | 0 | 0 | 0 | 0 | 0 | 0 | 0 |
| 6a | 2589 | 235 | 2824 | SY | ODOT Item 202 Pavement and Base Removed | 0 | 0 | 0 | 0 | 0 | 0 | 0 | 0 | 0 | 0 | 0 | 0 | 0 | 0 | 0 | 0 | 1597 | 992 | 0 |
| 6b | 76 | 14 | 90 | SY | ODOT Item 202 Driveway and Sidewalk Pavement Removed | 0 | 0 | 0 | 0 | 0 | 0 | 0 | 0 | 0 | 0 | 0 | 0 | 0 | 0 | 0 | 0 | 21 | 55 | 0 |
| 6c | 612 | 68 | 680 | SY | ODOT Item 254 Pavement Planing | 0 | 0 | 0 | 0 | 0 | 0 | 0 | 0 | 0 | 0 | 0 | 0 | 0 | 0 | 0 | 0 | 612 | 0 | 0 |
| 7a | 878 | 85 | 963 | CY | ODOT Item 304 Aggregate Base | 0 | 0 | 0 | 0 | 0 | 0 | 0 | 0 | 0 | 0 | 0 | 0 | 0 | 0 | 0 | 0 | 537 | 341 | 0 |
| 7b | 137 | 16 | 153 | CY | ODOT Item 301 Asphalt Concrete Base | 0 | 0 | 0 | 0 | 0 | 0 | 0 | 0 | 0 | 0 | 0 | 0 | 0 | 0 | 0 | 0 | 134 | 3 | 0 |
| 7c | 314 | 34 | 348 | GAL | ODOT Item 407 Tack Coat | 0 | 0 | 0 | 0 | 0 | 0 | 0 | 0 | 0 | 0 | 0 | 0 | 0 | 0 | 0 | 0 | 215 | 99 | 0 |
| 7d | 128 | 14 | 142 | CY | ODOT Item 441 Asphalt Concrete Intermediate Course, Type 2 (448) | 0 | 0 | 0 | 0 | 0 | 0 | 0 | 0 | 0 | 0 | 0 | 0 | 0 | 0 | 0 | 0 | 67 | 61 | 0 |
| 7e | 126 | 16 | 142 | CY | ODOT Item 441 Asphalt Concrete Surface Course, Type 1 (448) | 0 | 0 | 0 | 0 | 0 | 0 | 0 | 0 | 0 | 0 | 0 | 0 | 0 | 0 | 0 | 0 | 92 | 34 | 0 |
| 7f | 2665 | 239 | 2904 | SY | ODOT Item 204 Subgrade Compaction | 0 | 0 | 0 | 0 | 0 | 0 | 0 | 0 | 0 | 0 | 0 | 0 | 0 | 0 | 0 | 0 | 1618 | 1047 | 0 |
| 7g | 2665 | 239 | 2904 | SY | Temporary Pavement Repair | 0 | 0 | 0 | 0 | 0 | 0 | 0 | 0 | 0 | 0 | 0 | 0 | 0 | 0 | 0 | 0 | 1618 | 1047 | 0 |
| 8a | 309 | 11 | 320 | SF | 4-Inch Concrete Sidewalk | 0 | 0 | 0 | 0 | 0 | 0 | 0 | 0 | 0 | 0 | 0 | 0 | 0 | 0 | 0 | 0 | 190 | 119 | 0 |
| 8b | 122 | 8 | 130 | SF | 6-Inch and 8-Inch Concrete Sidewalk and Curb Ramp with Detectable Warning Surface | 0 | 0 | 0 | 0 | 0 | 0 | 0 | 0 | 0 | 0 | 0 | 0 | 0 | 0 | 0 | 0 | 32 | 90 | 0 |
| 8c | 41 | 9 | 50 | SY | 8-Inch Concrete Driveway | 0 | 0 | 0 | 0 | 0 | 0 | 0 | 0 | 0 | 0 | 0 | 0 | 0 | 0 | 0 | 0 | 0 | 41 | 0 |
| 9a | 702 | 108 | 810 | LF | Curb or Curb and Gutter Removed | 0 | 0 | 0 | 0 | 0 | 0 | 0 | 0 | 0 | 0 | 0 | 0 | 0 | 0 | 0 | 0 | 702 | 0 | 0 |
| 9b | 702 | 108 | 810 | LF | Concrete Curb and Gutter, Type 2 | 0 | 0 | 0 | 0 | 0 | 0 | 0 | 0 | 0 | 0 | 0 | 0 | 0 | 0 | 0 | 0 | 702 | 0 | 0 |
| 10 | 1 | 0 | 1 | LS | Maintenance of Traffic | 0 | 0 | 0 | 0 | 0 | 0 | 0 | 0 | 0 | 0 | 0 | 0 | 0 | 0 | 0 | 0 | 0 | 0 | 0 |
| 11 | 1 | 0 | 1 | LS | Storm Water Pollution Prevention | 0 | 0 | 0 | 0 | 0 | 0 | 0 | 0 | 0 | 0 | 0 | 0 | 0 | 0 | 0 | 0 | 0 | 0 | 0 |
| 12 | 1 | 0 | 1 | LS | Clearing and Grubbing | 0 | 0 | 0 | 0 | 0 | 0 | 0 | 0 | 0 | 0 | 0 | 0 | 0 | 0 | 0 | 0 | 0 | 0 | 0 |
| 13 | 6522 | 0 | 6522 | LF | Post-Construction Sewer Televising 8-Inch Through 24-Inch Sewer | 550 | 589 | 550 | 550 | 550 | 550 | 550 | 550 | 550 | 550 | 521 | 90 | 266 | 50 | 56 | 0 | 0 | 0 | 0 |
| 14a | 1 | 0 | 1 | LS | Blue Grass Farms Pump Station Demolition | 0 | 0 | 0 | 0 | 0 | 0 | 0 | 0 | 0 | 0 | 0 | 0 | 0 | 0 | 0 | 0 | 0 | 0 | 0 |
| 14b | 1 | 0 | 1 | LS | Field Avenue Pump Station Demolition | 0 | 0 | 0 | 0 | 0 | 0 | 0 | 0 | 0 | 0 | 0 | 0 | 0 | 0 | 0 | 0 | 0 | 0 | 0 |
| 15 | 1 | 0 | 1 | EA | Remove and Replace Pedestrian Signal | 0 | 0 | 0 | 0 | 0 | 0 | 0 | 0 | 1 | 0 | 0 | 0 | 0 | 0 | 0 | 0 | 0 | 0 | 0 |
| 16 | 1 | 0 | 1 | LS | Pavement Markings for Cemetery Road | 0 | 0 | 0 | 0 | 0 | 0 | 0 | 0 | 0 | 0 | 0 | 0 | 0 | 0 | 0 | 0 | 0 | 0 | 0 |
| 17 | 1 | 0 | 1 | LS | Finzel Road Pump Station Rehabilitation | 0 | 0 | 0 | 0 | 0 | 0 | 0 | 0 | 0 | 0 | 0 | 0 | 0 | 0 | 0 | 0 | 0 | 0 | 0 |
| 18 | 5 | 1 | 6 | WEEK | Bypass Pumping | 0 | 0 | 0 | 0 | 0 | 0 | 0 | 0 | 0 | 0 | 0 | 0 | 0 | 0 | 0 | 0 | 0 | 0 | 0 |
| 19a | 0 | 40 | 40 | LF | Water Main Repair, Less Than or Equal to 12-Inch Diameter | 0 | 0 | 0 | 0 | 0 | 0 | 0 | 0 | 0 | 0 | 0 | 0 | 0 | 0 | 0 | 0 | 0 | 0 | 0 |
| 19b | 0 | 2 | 2 | EA | Water Service Repair | 0 | 0 | 0 | 0 | 0 | 0 | 0 | 0 | 0 | 0 | 0 | 0 | 0 | 0 | 0 | 0 | 0 | 0 | 0 |
| 20 | 0 | 1 | 1 | LS | Topsoil Stripped, Stockpiled and Placed | 0 | 0 | 0 | 0 | 0 | 0 | 0 | 0 | 0 | 0 | 0 | 0 | 0 | 0 | 0 | 0 | 0 | 0 | 0 |
| 21 | 88 | 2 | 90 | CY | Dump Rock Fill, Type D | 0 | 0 | 0 | 0 | 0 | 0 | 0 | 0 | 0 | 0 | 0 | 0 | 0 | 0 | 88 | 0 | 0 | 0 | 0 |
| 22 | 1976 | 14 | 1990 | CY | Ditch Enclosure Fill | 0 | 0 | 0 | 0 | 0 | 0 | 0 | 0 | 0 | 0 | 0 | 0 | 0 | 0 | 1398 | 578 | 0 | 0 | 0 |
| 23 | 0 | 1 | 1 | LS | Video Recording of the Zone of Influence | 0 | 0 | 0 | 0 | 0 | 0 | 0 | 0 | 0 | 0 | 0 | 0 | 0 | 0 | 0 | 0 | 0 | 0 | 0 |
| 24 | 0 | 10 | 10 | EA | Trees | 0 | 0 | 0 | 0 | 0 | 0 | 0 | 0 | 0 | 0 | 0 | 0 | 0 | 0 | 0 | 0 | 0 | 0 | 0 |
| **Alternate 1 (Not Included in Base Bid)** | | | | | | | | | | | | | | | | | | | | | | | | |
| 2i-alt | 185 | 0 | 185 | LF | 24-Inch Sanitary Sewer, Type B (Greater than 20-Feet Deep) | 0 | 0 | 0 | 0 | 0 | 0 | 0 | 0 | 0 | 0 | 0 | 102 | 0 | 83 | 0 | 0 | 0 | 0 | 0 |
| **Alternate 2 (Not Included in Base Bid)** | | | | | | | | | | | | | | | | | | | | | | | | |
| 2i-alt | 185 | 0 | 185 | LF | 24-Inch DIP Sanitary Sewer in 42-inch Bored Casing | 0 | 0 | 0 | 0 | 0 | 0 | 0 | 0 | 0 | 0 | 0 | 102 | 0 | 83 | 0 | 0 | 0 | 0 | 0 |

QUANTITY NOTES:

1. QUANTITIES SHOWN IN THE GENERAL SUMMARY ARE REFERENCED TO THE SEWER LINE PLAN AND PROFILE SHEETS.
2. BIDDERS/CONTRACTORS SHALL CALL DISCREPANCIES TO THE ENGINEERS ATTENTION AS SOON AS THEY ARE DISCOVERED.
3. BIDDER ACKNOWLEDGES THAT QUANTITIES ARE NOT GUARANTEED AND FINAL PAYMENT WILL BE BASED ON ACTUAL QUANTITIES DETERMINED AS PROVIDED IN THE CONTRACT DOCUMENTS.

# GENERAL SUMMARY

VILLAGE OF WHITEHOUSE, OHIO WABASH CANNONBALL TRAIL
INTERCEPTOR SEWER & FINZEL ROAD PUMP STATION REHABILITATION

Jones & Henry Engineers, Ltd.
Fluid thinking®
www.JHeng.com

JOB NO. 334-7448.002
SCALE NONE
THIS LINE SCALES 1" WHEN PLOTTED TO NOTED SCALE
DESIGNED AMM DRAWN AMM CHECKED TAB
STATUS: ISSUED FOR BID
DATE: SEPTEMBER 2020
SHEET NO. G-3 4
3 OF 39

| NO. | DATE | REVISIONS AFTER ISSUED FOR BID | BY |
|---|---|---|---|
| 1 | 10-22-2020 | SHEET REISSUED | AMM |
| 2 | | | |
| 3 | | | |
| 4 | 11-03-2020 | SHEET REISSUED | |
| 5 | | | |

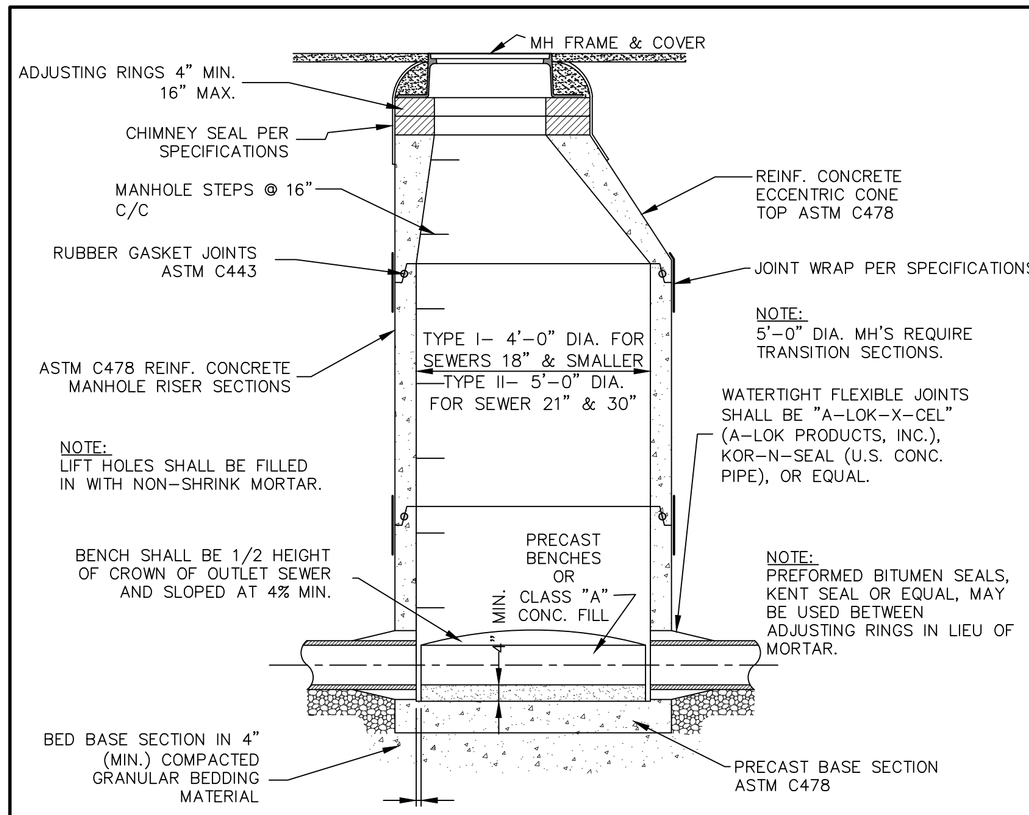


FOR PRECAST INVERTS PROVIDE 1" APPROX. OPENING BETWEEN PIPE AND CHANNEL CONCRETE AT PENETRATION

## TYPE I & II MANHOLES

½"= 1'-0"

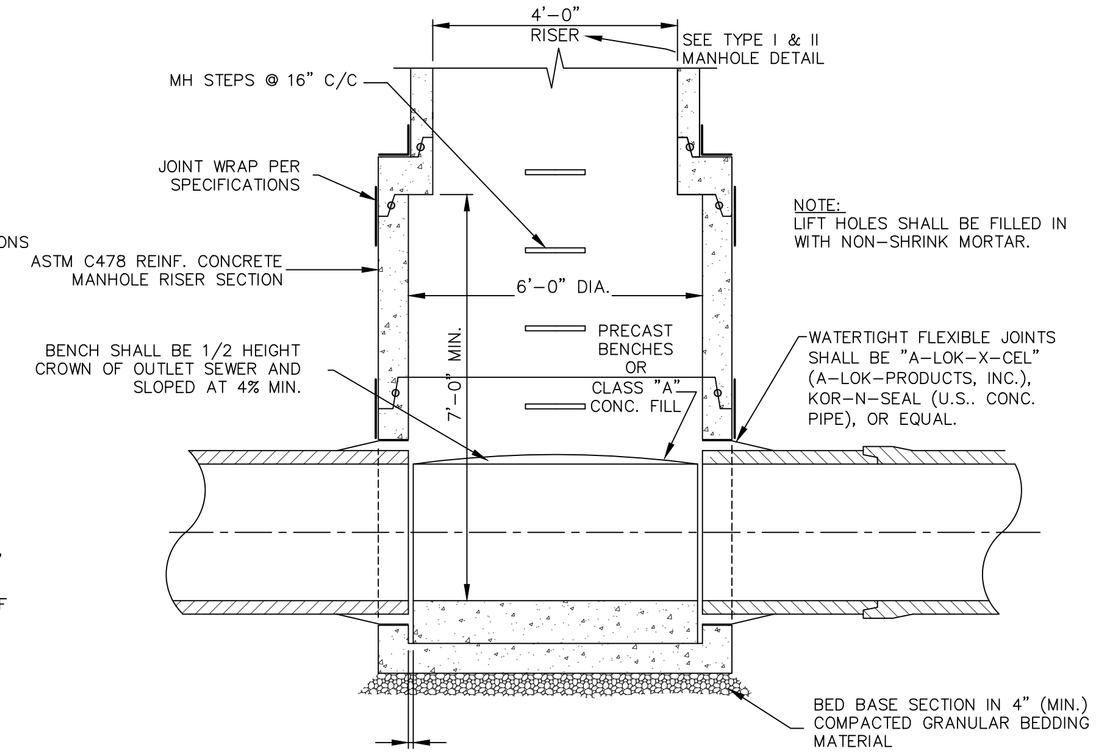


FOR PRECAST INVERTS PROVIDE 1" APPROX. OPENING BETWEEN PIPE AND CHANNEL CONCRETE AT PENETRATION

## TYPE III MANHOLES

½"= 1'-0"

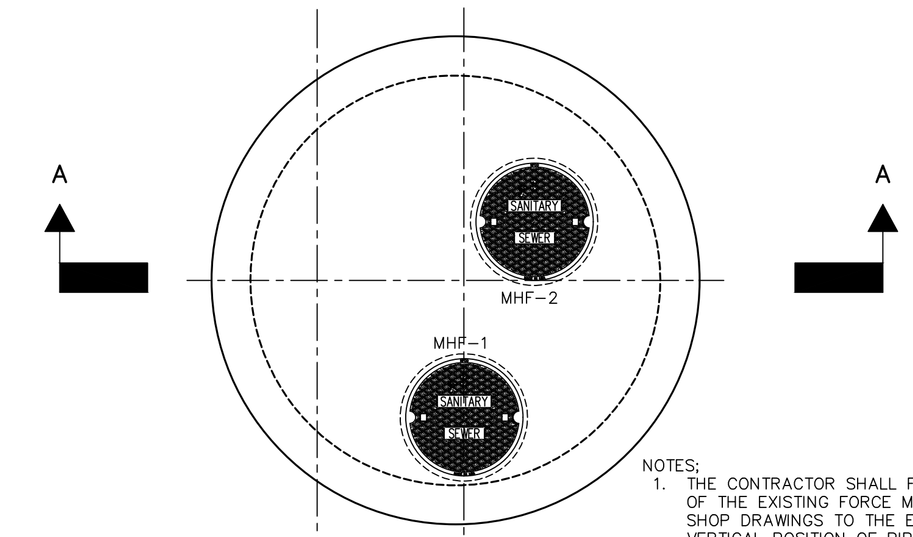


## TOP PLAN

½"=1'-0"

NOTES;

1. THE CONTRACTOR SHALL FIELD VERIFY THE DEPTH OF THE EXISTING FORCE MAIN PRIOR TO SUBMITTING SHOP DRAWINGS TO THE ENGINEER TO MODIFY THE VERTICAL POSITION OF PIPE CENTERLINES.
2. PIPE PENETRATIONS SHALL BE LOCATED AT THE PRECAST WALL JOINT TO PERMIT DOGHOUSE STYLE CONSTRUCTION.
3. BASE SLAB SECTIONS SHALL BE INTEGRAL WITH WALL SECTIONS WITH WALLS EXTENDED TO A HEIGHT COORDINATED WITH CONTRACTOR'S LIFTING CAPABILITIES.
4. THE CONTRACTOR SHALL PROPERLY SUPPORT THE FORCE MAIN DURING THE WORK.
5. THE FORCE MAIN SHALL REMAIN IN SERVICE DURING THE WORK.
6. SEE SPECIFICATIONS FOR MANHOLE FRAME AND LID MODEL NUMBER.

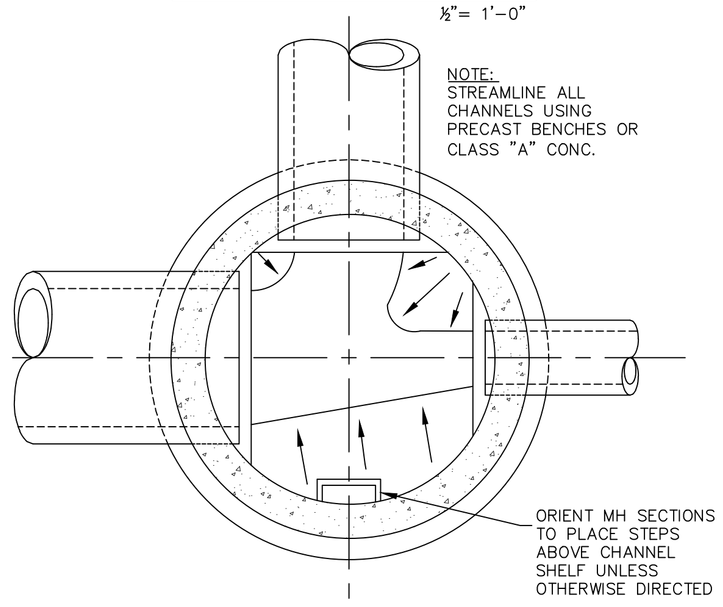


## SECTIONAL PLAN

½"=1'-0"

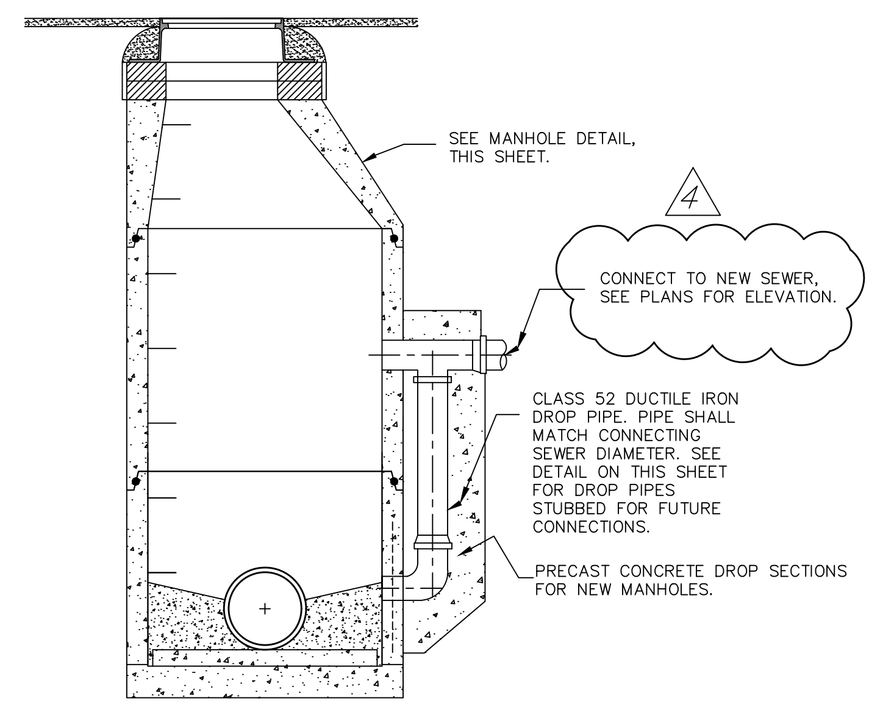


## OUTSIDE DROP MANHOLE DETAIL

NTS

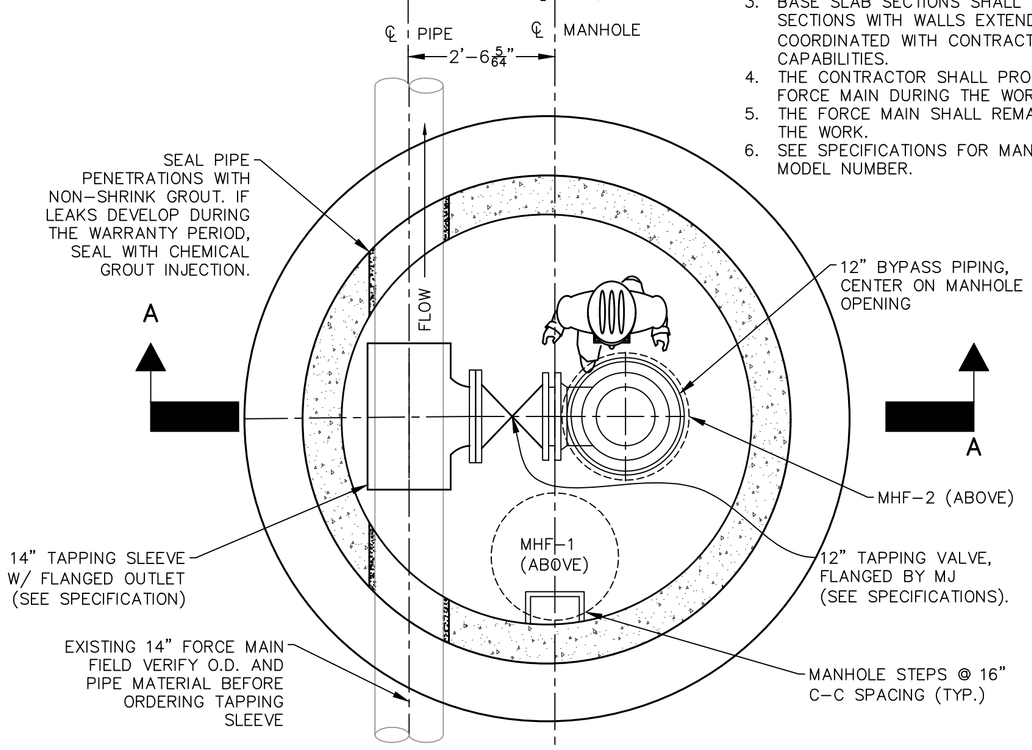


## PLAN AT ELEVATION 639.00

½"=1'-0"

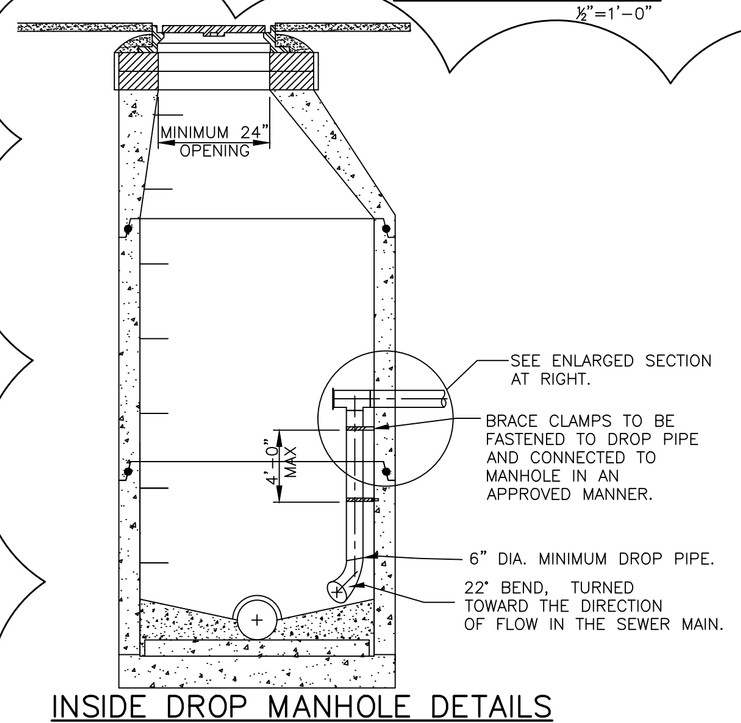


## INSIDE DROP MANHOLE DETAILS

NOTES:

1. THE INSIDE DROP MUST BE A COMFORTABLE DISTANCE FROM THE MANHOLE STEPS.

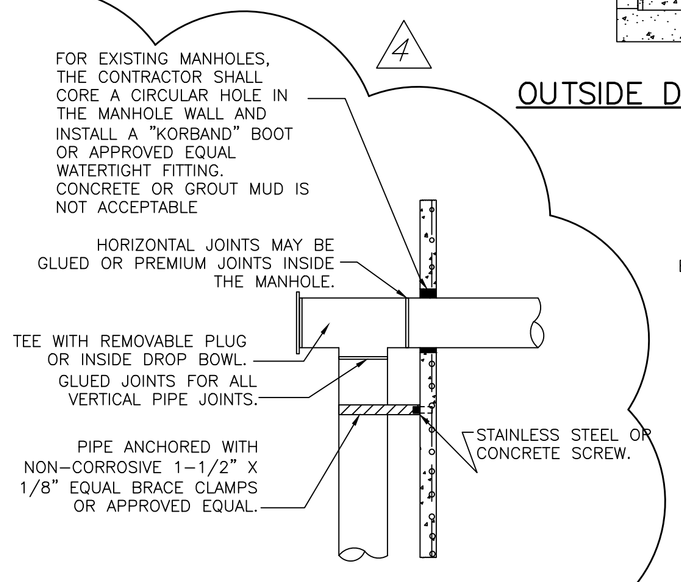


## ENLARGED SECTION

NTS

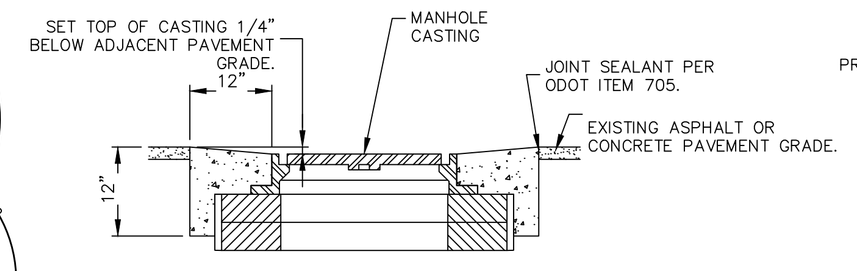


## CONCRETE COLLAR DETAIL

NTS

NOTES:

1. THE CONCRETE COLLAR SHALL BE CONSTRUCTED USING MEDIUM SET (MS) CONCRETE OR APPROVED ALTERNATIVE MIX.
2. THE CONCRETE COLLAR SHALL NOT BE OPENED TO TRAFFIC UNTIL THE CONCRETE HAS CURED FOR 24-HOURS.
3. CONCRETE COLLARS SHALL BE PROVIDED FOR ALL MANHOLES LOCATED IN PAVED AREAS.

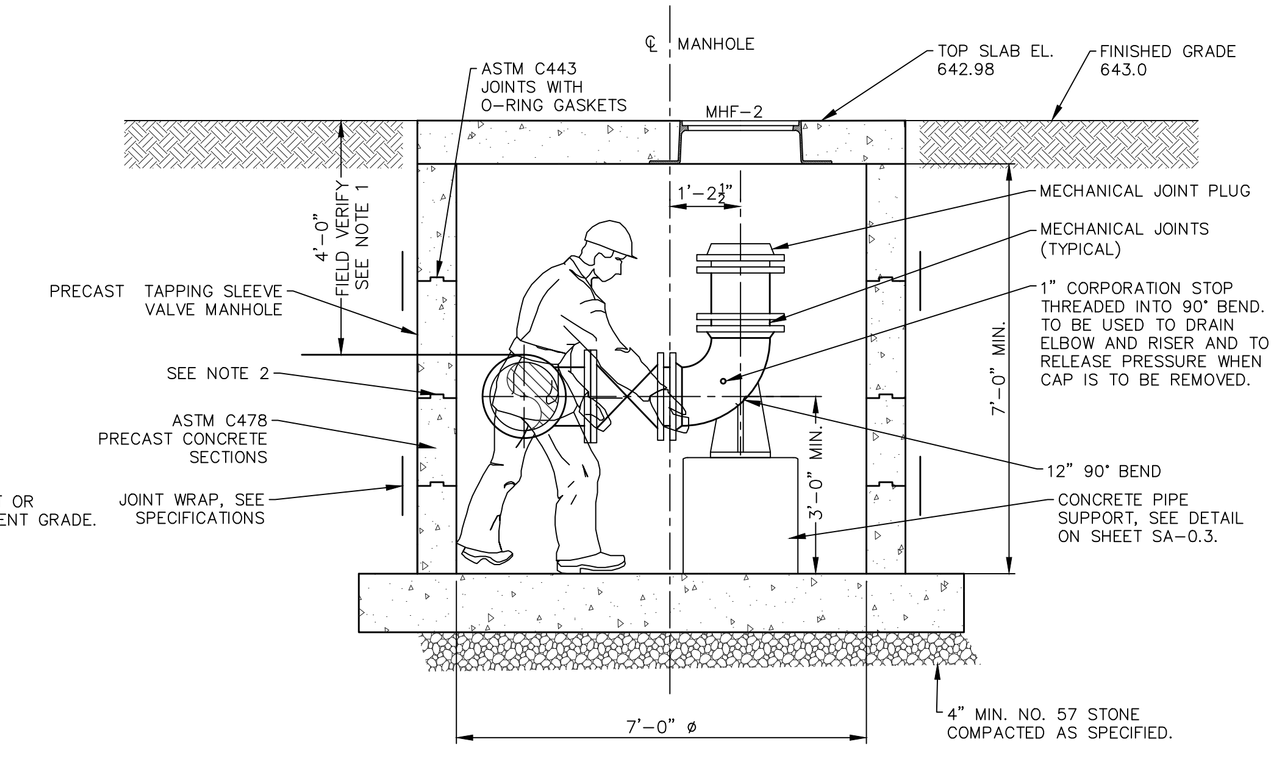


## SECTION A-A
## FORCE MAIN BYPASS PUMPING MANHOLE

½"=1'-0"

# SANITARY SEWER DETAILS

VILLAGE OF WHITEHOUSE, OHIO WABASH CANNONBALL TRAIL
INTERCEPTOR SEWER & FINZEL ROAD PUMP STATION REHABILITATION

| NO. | DATE | REVISIONS AFTER ISSUED FOR BID | BY |
|---|---|---|---|
| 5 | 9-03-2020 | DROP DETAILS CHANGED | AMM |
| 4 | | | |
| 3 | | | |
| 2 | | | |
| 1 | | | |

Jones & Henry Engineers, Ltd.
Fluid thinking©.
www.JHeng.com

JOB NO. 334-7448.002

SCALE AS NOTED

THIS LINE SCALES 1" WHEN PLOTTED TO NOTED SCALE

| DESIGNED | DRAWN | CHECKED |
|---|---|---|
| AMM | AMM | TAB |

STATUS: ISUED FOR BID
DATE: SEPTEMBER 2020

SHEET NO.
SA-0.1
4 OF 39

TOL-7448002SADETAILS
11/4/2020 1:44 PM
11/4/2020 1:44 PM

# LOGAN STREET SANITARY SEWER PLAN AND PROFILE STA. 0+00 TO 5+50

VILLAGE OF WHITEHOUSE, OHIO WABASH CANNONBALL TRAIL INTERCEPTOR SEWER & FINZEL ROAD PUMP STATION REHABILITATION

| NO. | DATE | REVISIONS AFTER ISSUED FOR BID | BY |
|---|---|---|---|
| 5 | 11-03-2020 | ALIGNMENT ADJUSTMENT | AMM |
| 4 | | | |
| 3 | | | |
| 2 | | | |
| 1 | | | |

Jones & Henry Engineers, Ltd.

Fluid thinking... www.JHeng.com

JOB NO. 334-7448.002

SCALE 1"=20' HOR. 1"=4' VERT.

THIS LINE SCALES 1" WHEN PLOTTED TO NOTED SCALE

DESIGNED AMM | DRAWN AMM | CHECKED TAB

STATUS: ISSUED FOR BID

DATE: SEPTEMBER 2020

SHEET NO. SA-1.1

11 OF 39

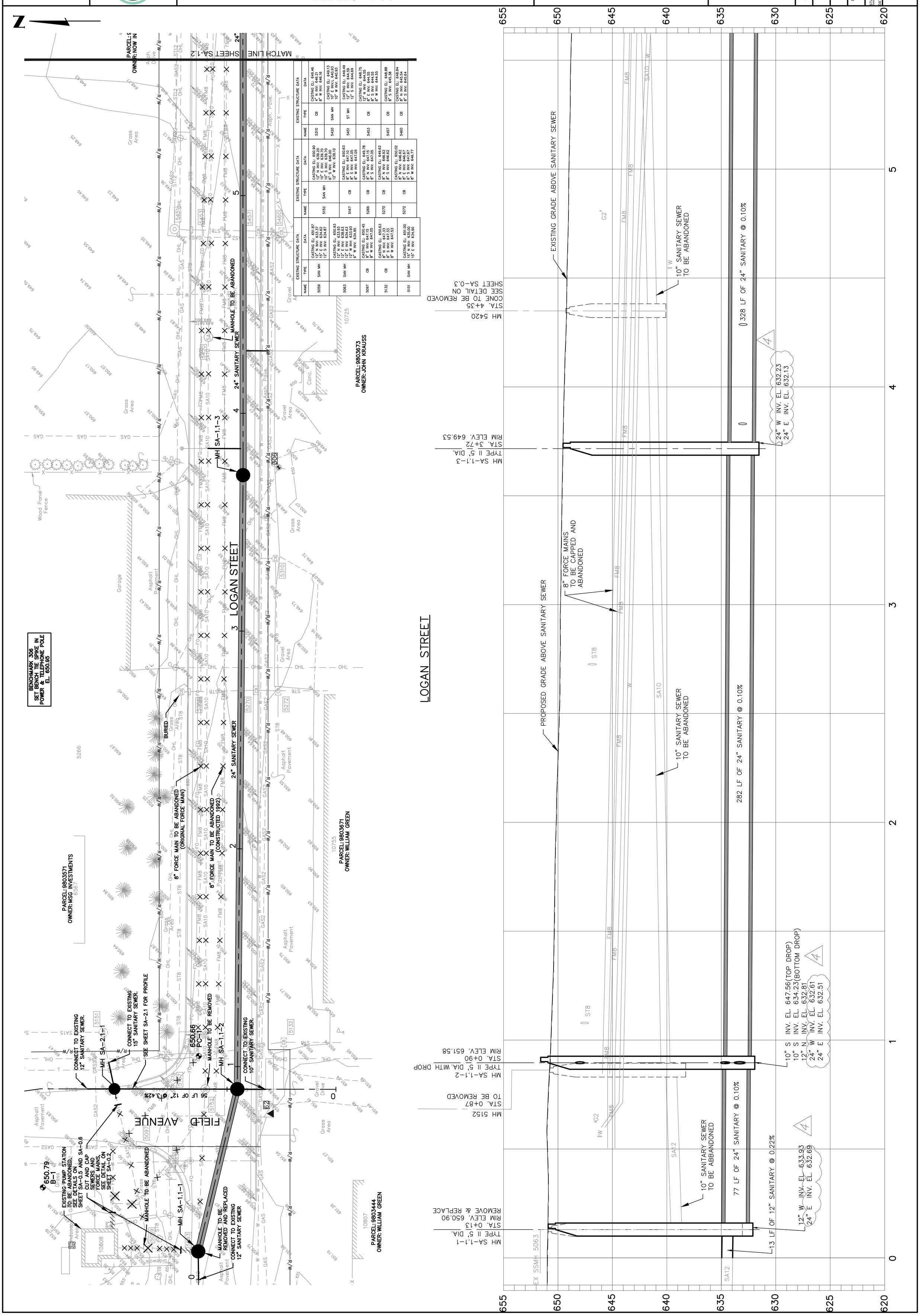


TOL-7448002SA-STA. 0+00 TO 5+50
11/4/2020 1:45 PM - AMITCHELL
11/4/2020 1:46 PM

NOTES:
1. FIELD VERIFY THE LOCATION AND DEPTH OF THE EXISTING FORCE MAIN.
2. THE CONTRACTOR MAY TEMPORARILY DIVERT OR CONSTRUCT AN EARTHEN DAM AND PUMP FLOW FROM EXISTING DRAINAGE DITCH TO PERFORM SEWER CONSTRUCTION IN THIS AREA. WEATHER CONDITIONS AT THE TIME OF CONSTRUCTION WILL IMPACT THE FLOW RATE IN THE DITCH.

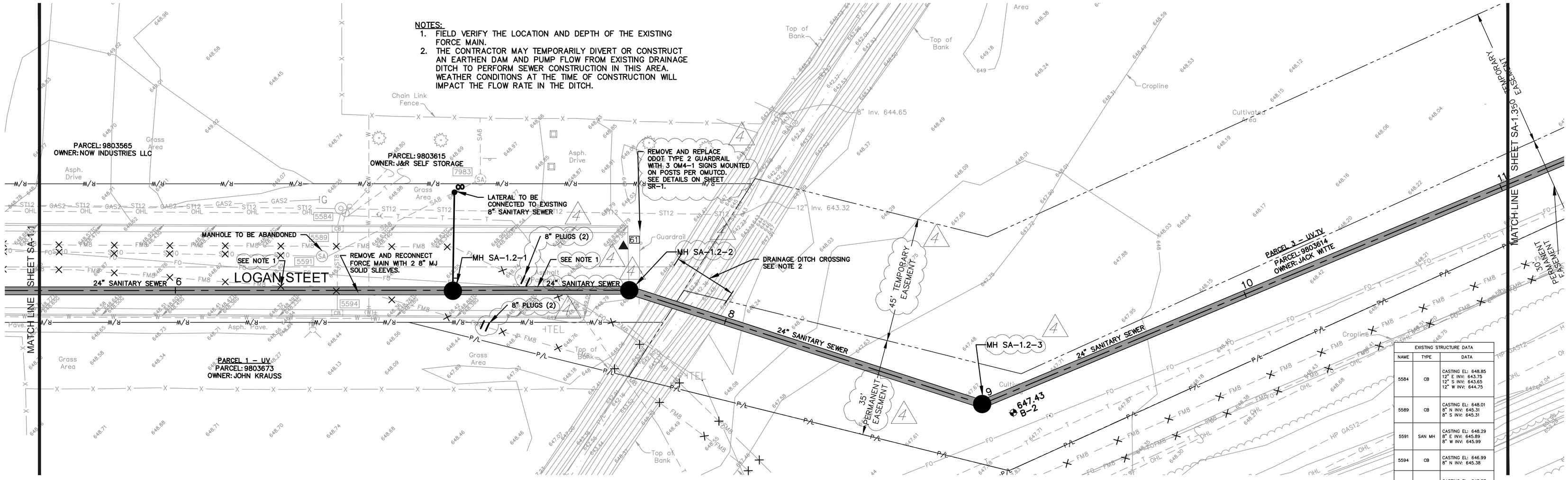


| EXISTING STRUCTURE DATA | | |
|---|---|---|
| NAME | TYPE | DATA |
| 5584 | CB | CASTING EL: 648.85<br>12" E INV: 643.75<br>12" S INV: 643.65<br>12" W INV: 644.75 |
| 5589 | CB | CASTING EL: 648.01<br>8" N INV: 645.31<br>8" S INV: 645.31 |
| 5591 | SAN MH | CASTING EL: 648.29<br>8" E INV: 645.89<br>8" W INV: 645.99 |
| 5594 | CB | CASTING EL: 646.99<br>8" N INV: 645.38 |
| 7983 | SAN MH | CASTING EL: 648.57<br>6" N INV: 642.37<br>8" W INV: 642.27 |

## LOGAN STREET

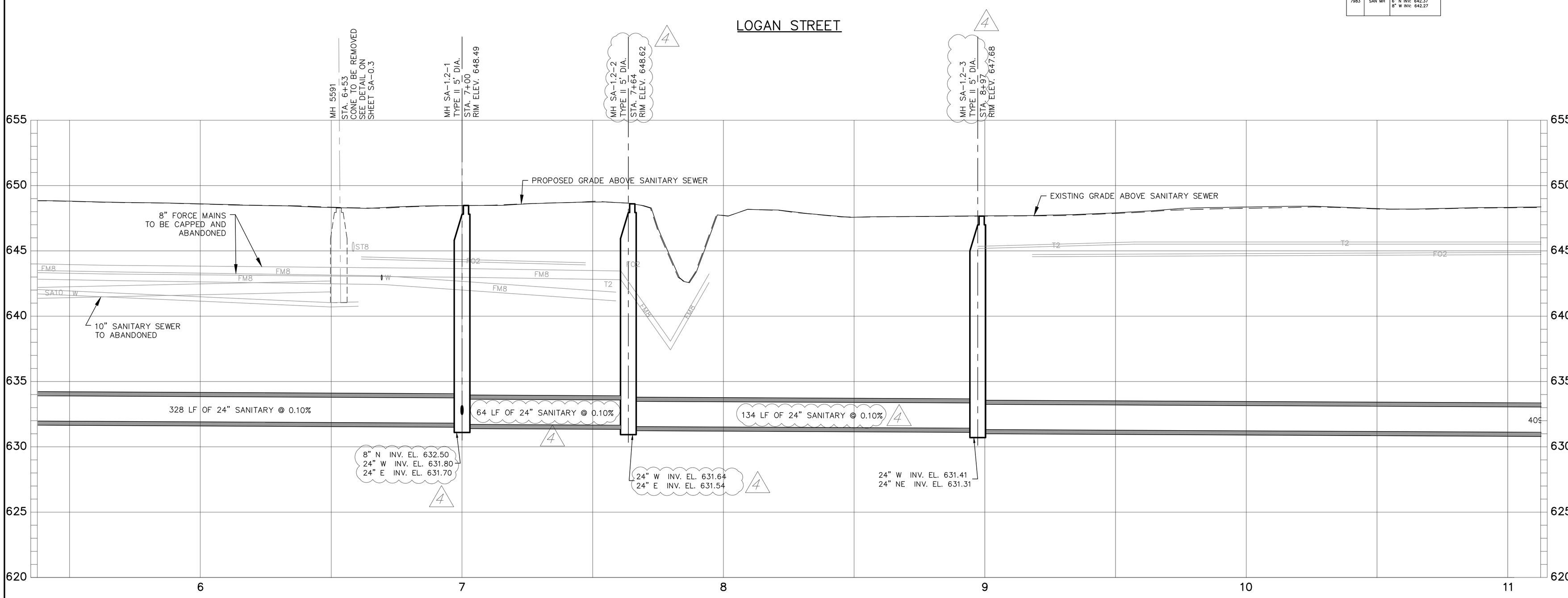


LOGAN STREET
SANITARY SEWER
PLAN AND PROFILE
STA. 5+50 TO 11+00

VILLAGE OF WHITEHOUSE, OHIO WABASH CANNONBALL TRAIL
INTERCEPTOR SEWER & FINZEL ROAD PUMP STATION REHABILITATION

| NO. | DATE | REVISIONS AFTER ISSUED FOR BID | BY |
|---|---|---|---|
| 5 | 11-05-2020 | ALIGNMENT ADJUSTMENT, EASEMENT CHANGE AND GUARDRAIL NOTE | AMM |

Jones & Henry Engineers, Ltd.
Fluid thinking®.
www.JHeng.com

| | |
|---|---|
| JOB NO. | 334-7448.002 |
| SCALE | 1"=20' HOR.<br>1"=4' VERT |
| THIS LINE SCALES 1" WHEN PLOTTED TO NOTED SCALE | |
| DESIGNED AMM | DRAWN AMM / CHECKED TAB |
| STATUS: | ISSUED FOR BID |
| DATE: | SEPTEMBER 2020 |
| SHEET NO. | SA-1.2 |
| | 12 OF 39 |

TQL-7448002SA-STA. 5+50 TO 11+00
11/2/2020 1:45 PM AMMCHELL
11/4/2020 1:47 PM

# WABASH CANNONBALL TRAIL
## SANITARY SEWER
## PLAN AND PROFILE
## STA. 11+00 TO 16+50

VILLAGE OF WHITEHOUSE, OHIO WABASH CANNONBALL TRAIL
INTERCEPTOR SEWER & FINZEL ROAD PUMP STATION REHABILITATION

| NO. | DATE | REVISIONS AFTER ISSUED FOR BID | BY |
|---|---|---|---|
| 5 | 11-03-2020 | ALIGNMENT ADJUSTMENT | AMM |
| 4 | | | |
| 3 | | | |
| 2 | | | |
| 1 | | | |

Jones & Henry Engineers, Ltd.
Fluid thinking®
www.JHeng.com

JOB NO. 334-7448.002
SCALE 1"=20' HOR. 1"=4' VERT.
THIS LINE SCALES 1" WHEN PLOTTED TO NOTED SCALE

DESIGNED AMM | DRAWN AMM | CHECKED TAB
STATUS: ISSUED FOR BID
DATE: SEPTEMBER 2020
SHEET NO. SA-1.3
13 OF 39

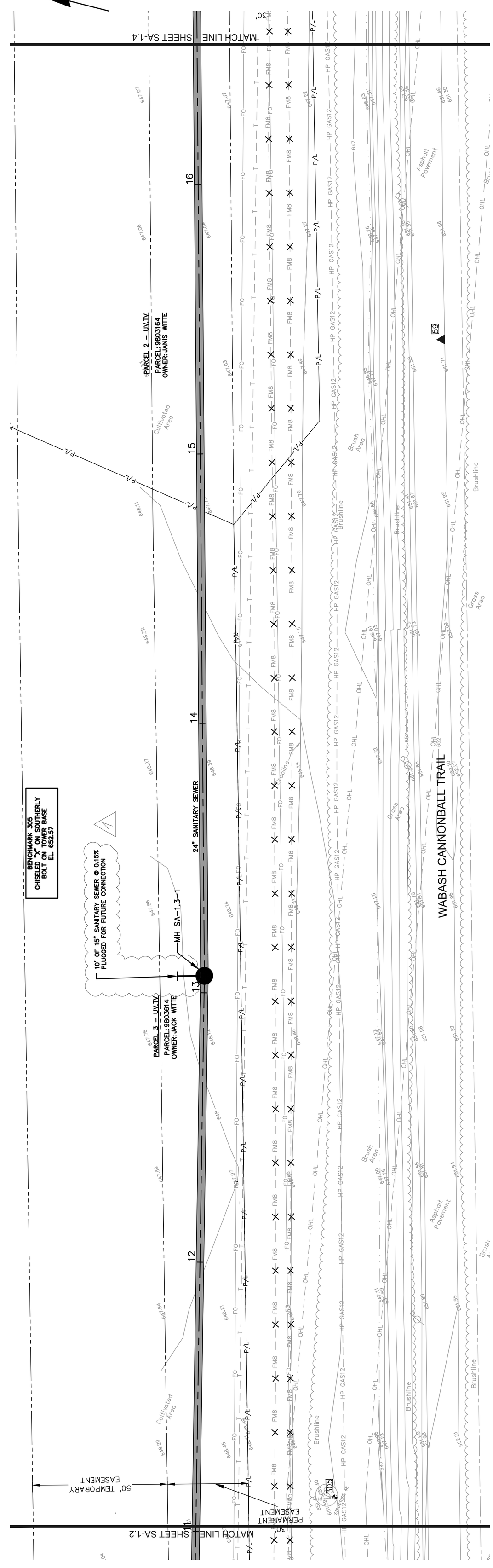


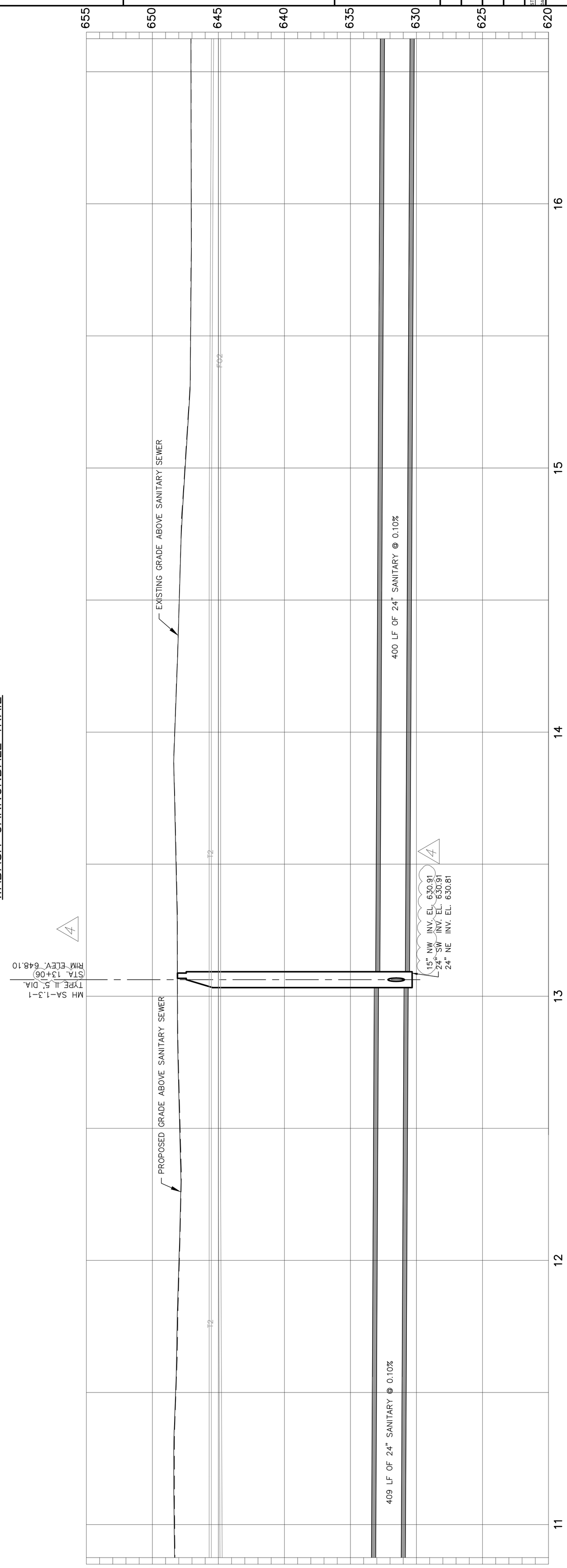


TOL-7448002SA-STA. 11+00 TO 16+50
11/4/2020 1:45 PM - AMITCHELL
11/4/2020 1:57 PM

# WABASH CANNONBALL TRAIL
## SANITARY SEWER
## PLAN AND PROFILE
## STA. 16+50 TO 22+00

VILLAGE OF WHITEHOUSE, OHIO WABASH CANNONBALL TRAIL
INTERCEPTOR SEWER & FINZEL ROAD PUMP STATION REHABILITATION

| NO. | DATE | REVISIONS AFTER ISSUED FOR BID | BY |
|---|---|---|---|
| 5 | 11-03-2020 | ALIGNMENT ADJUSTMENT | AMM |
| 4 | | | |
| 3 | | | |
| 2 | | | |
| 1 | | | |

Jones & Henry Engineers, Ltd.
Fluid thinking...
www.JHeng.com

JOB NO. 334-7448.002
SCALE 1"=20' HOR. 1"=4' VERT.
THIS LINE SCALES 1" WHEN PLOTTED TO NOTED SCALE

DESIGNED AMM | DRAWN AMM | CHECKED TAB
STATUS: ISSUED FOR BID
DATE: SEPTEMBER 2020
SHEET NO. SA-1.4
14 OF 39

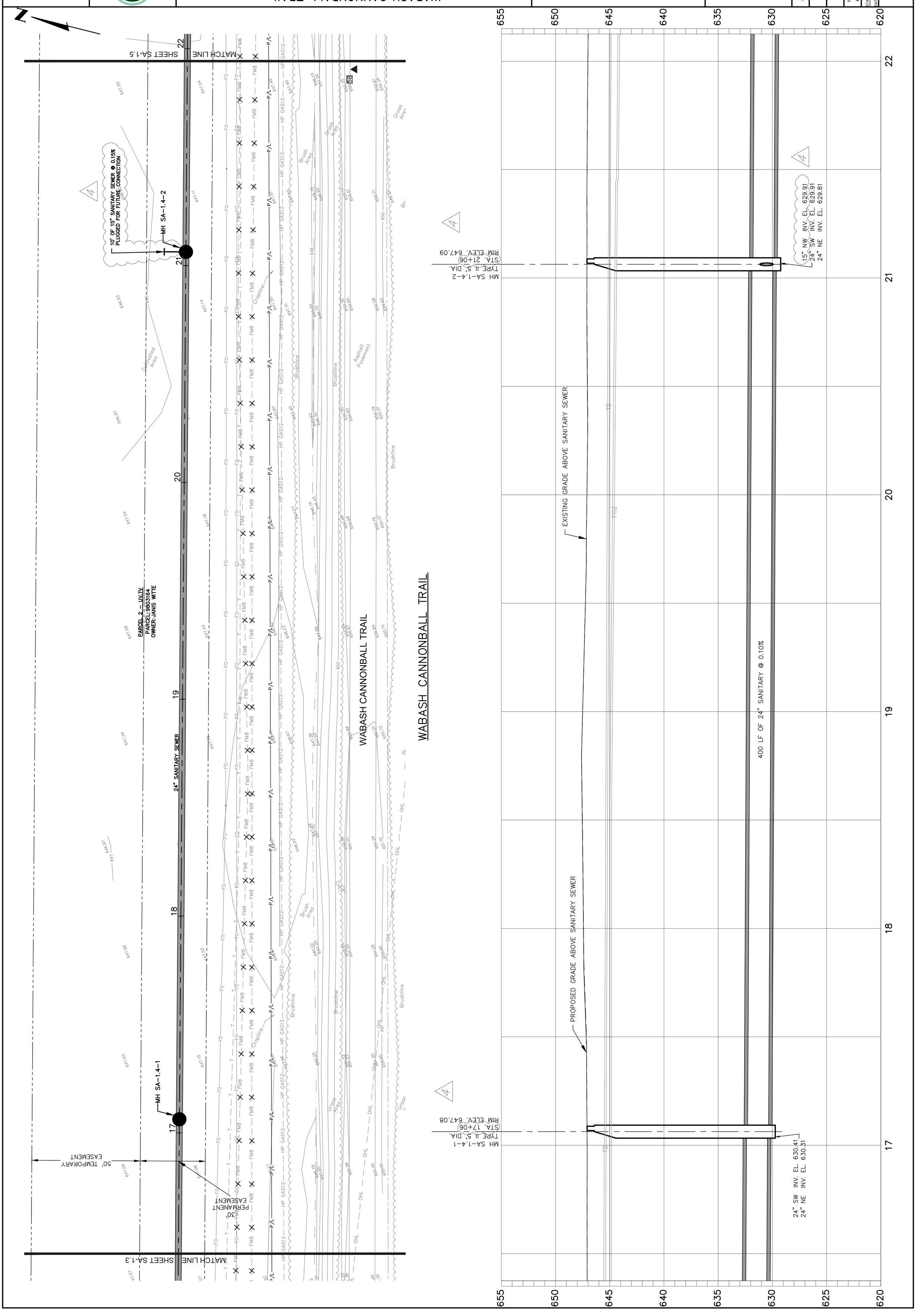


TOL-7448002SA-STA. 16+50 TO 22+00
11/4/2020 1:45 PM - AMITCHELL
11/4/2020 1:58 PM

# WABASH CANNONBALL TRAIL
## SANITARY SEWER
## PLAN AND PROFILE
## STA. 22+00 TO 27+50

VILLAGE OF WHITEHOUSE, OHIO WABASH CANNONBALL TRAIL
INTERCEPTOR SEWER & FINZEL ROAD PUMP STATION REHABILITATION

| NO. | DATE | REVISIONS AFTER ISSUED FOR BID | BY |
|---|---|---|---|
| 5 | 11-03-2020 | ALIGNMENT ADJUSTMENT | AMM |
| 4 | | | |
| 3 | | | |
| 2 | | | |
| 1 | | | |

Jones & Henry Engineers, Ltd.
Fluid thinking®
www.JHeng.com

JOB NO. 334-7448.002
SCALE 1"=20' HOR. 1"=4' VERT.
THIS LINE SCALES 1" WHEN PLOTTED TO NOTED SCALE

DESIGNED AMM | DRAWN AMM | CHECKED TAB
STATUS: ISSUED FOR BID
DATE: SEPTEMBER 2020
SHEET NO. SA-1.5
15 OF 39

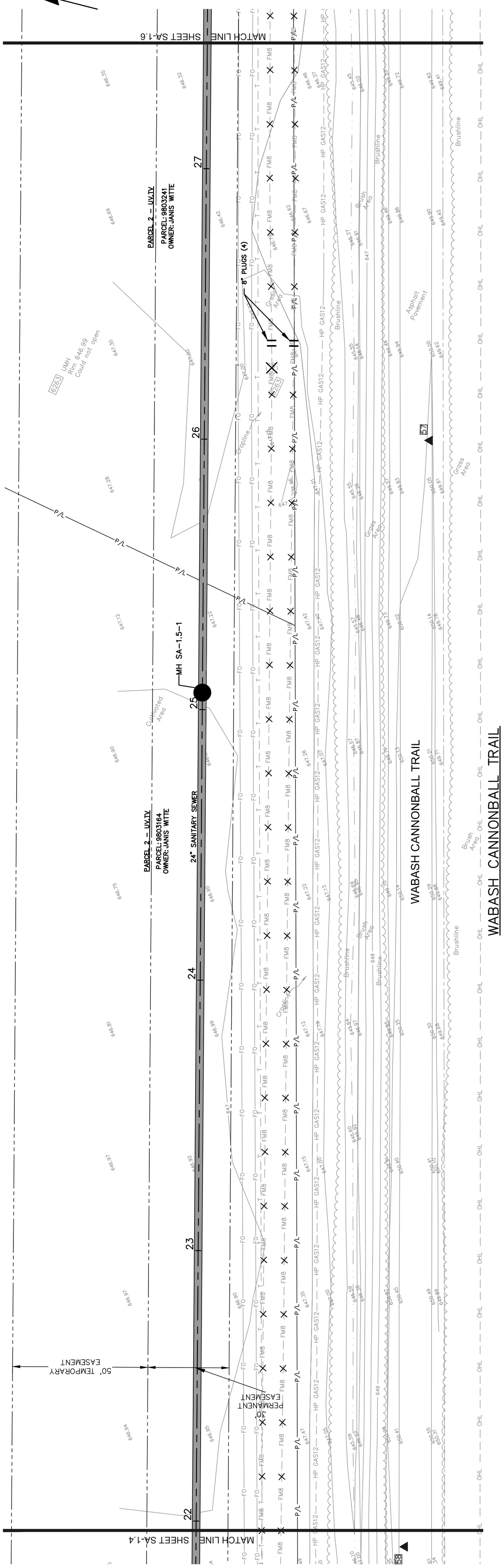


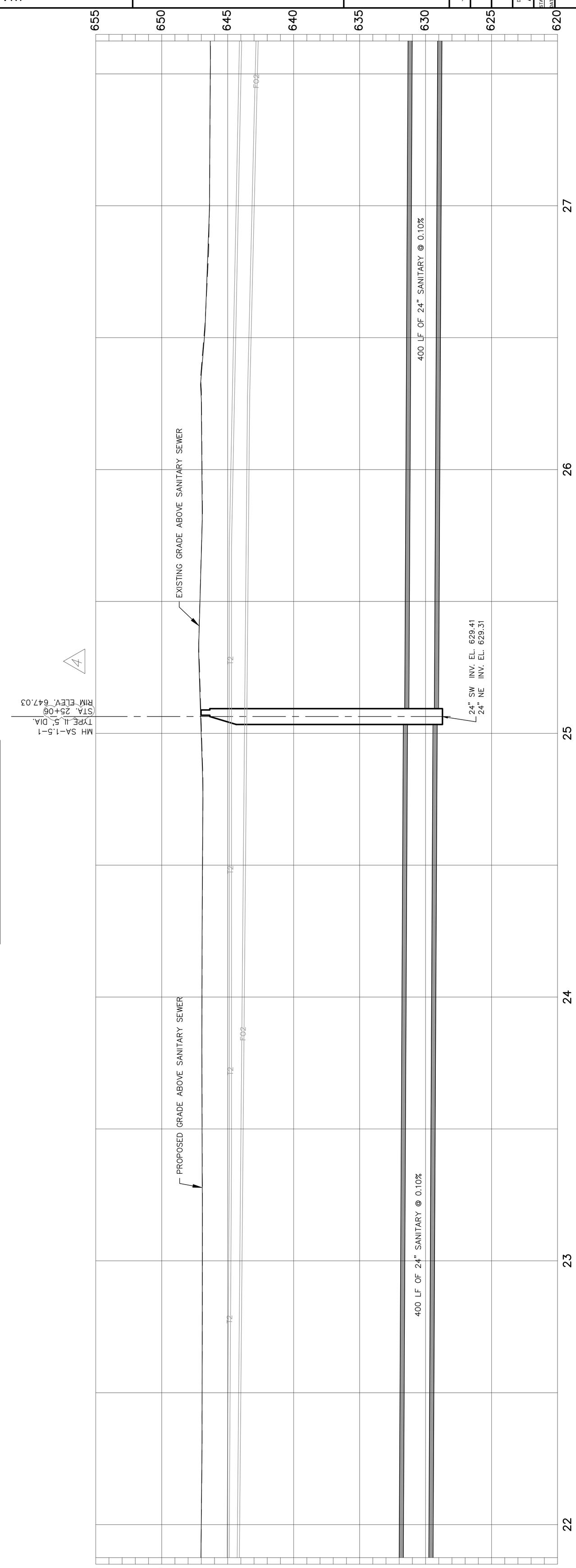


TOL-7448002SA-STA. 22+00 TO 27+50
11/4/2020 1:45 PM - AMITCHELL
11/4/2020 1:59 PM

WABASH CANNONBALL TRAIL
SANITARY SEWER
PLAN AND PROFILE
STA. 27+50 TO 33+00

VILLAGE OF WHITEHOUSE, OHIO WABASH CANNONBALL TRAIL
INTERCEPTOR SEWER & FINZEL ROAD PUMP STATION REHABILITATION

| NO. | DATE | REVISIONS AFTER ISSUED FOR BID | BY |
|---|---|---|---|
| 5 | 11-03-2020 | ALIGNMENT ADJUSTMENT | AMM |
| 4 | | | |
| 3 | | | |
| 2 | | | |
| 1 | | | |

Jones & Henry Engineers, Ltd.
Fluid thinking...
www.JHeng.com

JOB NO. 334-7448.002
SCALE 1"=20' HOR. 1"=4' VERT
THIS LINE SCALES 1" WHEN PLOTTED TO NOTED SCALE
DESIGNED AMM
DRAWN AMM
CHECKED TAB
STATUS: ISSUED FOR BID
DATE: SEPTEMBER 2020
SHEET NO. SA-1.6
16 OF 39

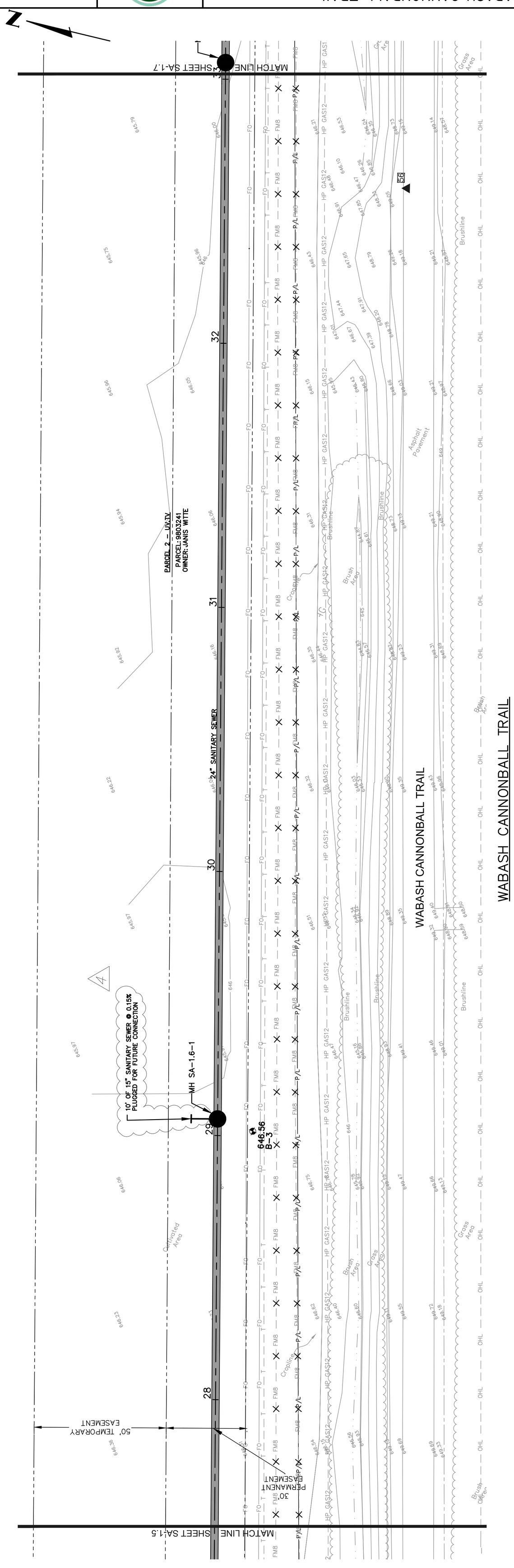


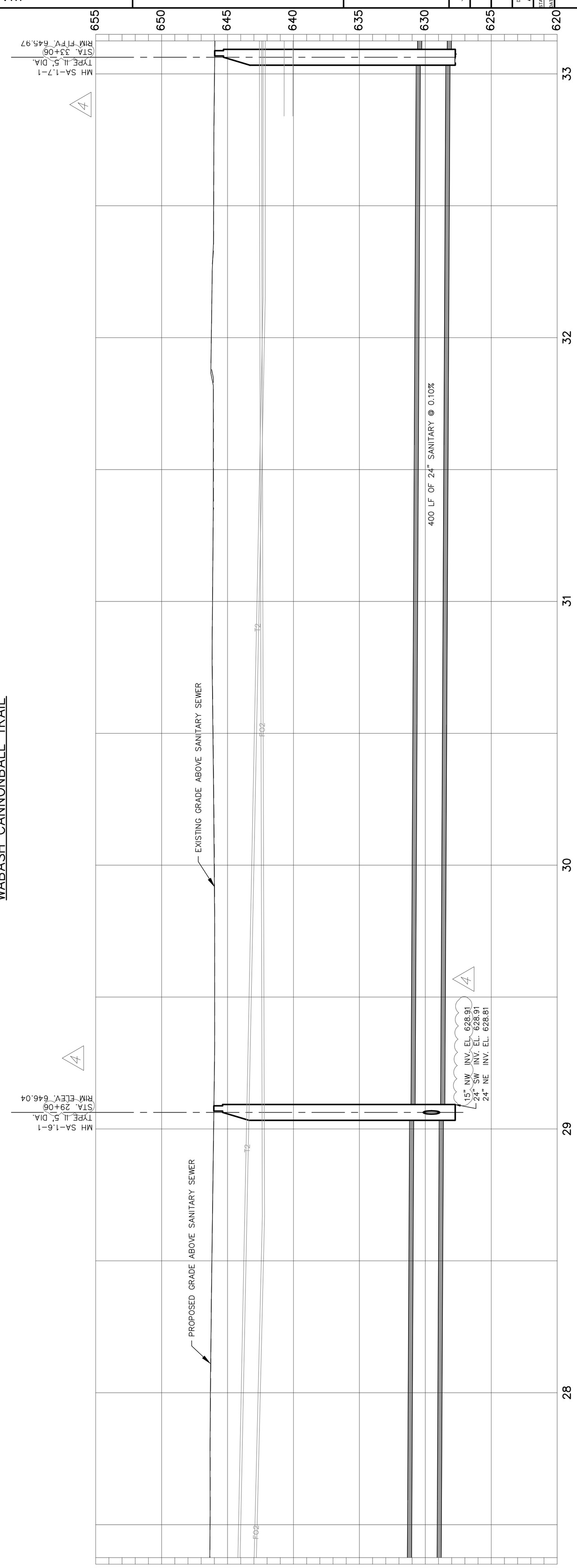


TOL-7448002SA-STA. 27+50 TO 33+00
11/4/2020 1:45 PM - AMITCHELL
11/4/2020 2:00 PM

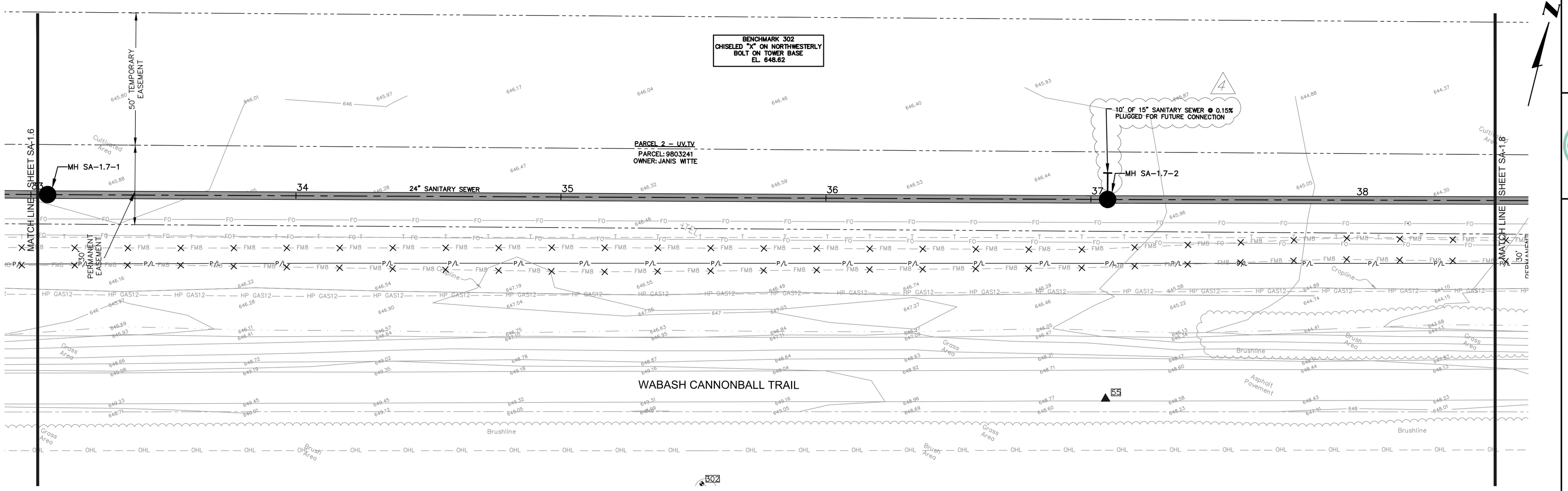


WABASH CANNONBALL TRAIL

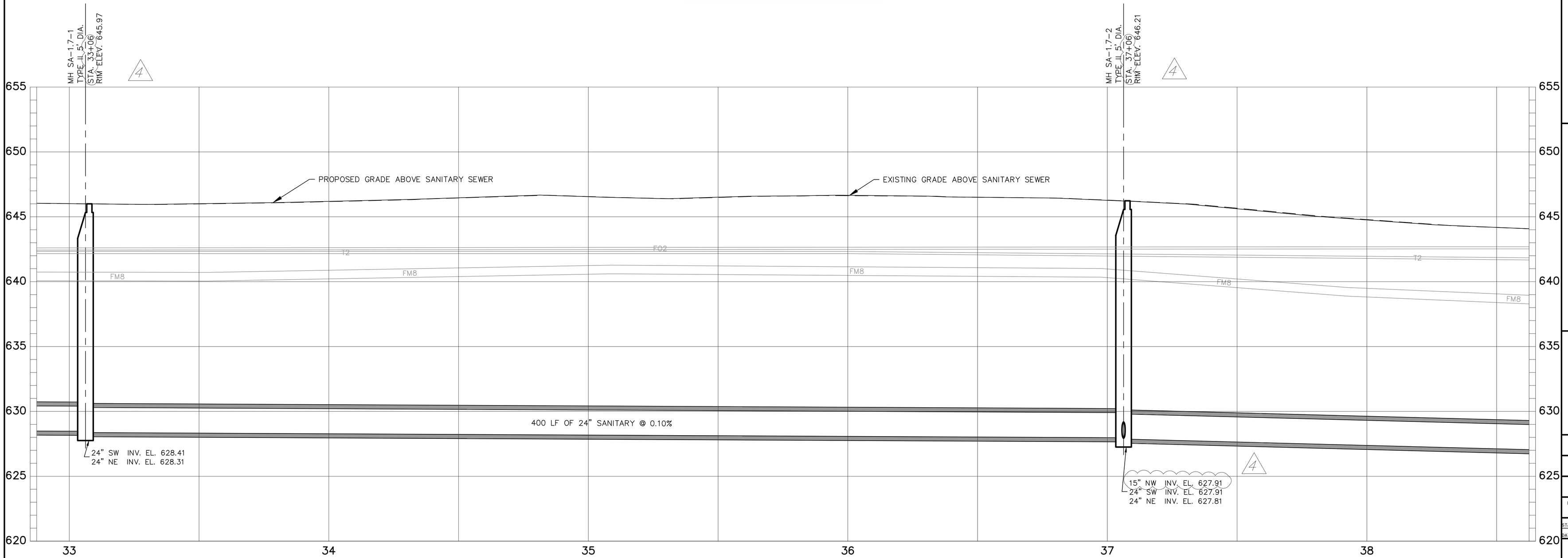


WABASH CANNONBALL TRAIL
SANITARY SEWER
PLAN AND PROFILE
STA. 33+00 TO 38+50

VILLAGE OF WHITEHOUSE, OHIO WABASH CANNONBALL TRAIL
INTERCEPTOR SEWER & FINZEL ROAD PUMP STATION REHABILITATION

| NO. | DATE | REVISIONS AFTER ISSUED FOR BID | BY |
|---|---|---|---|
| 5 | 11-03-2020 | ALIGNMENT ADJUSTMENT | AMM |
| 4 | | | |
| 3 | | | |
| 2 | | | |
| 1 | | | |

Jones & Henry Engineers, Ltd.
Fluid thinking®
www.JHeng.com

JOB NO. 334-7448.002
SCALE 1"=20' HOR. 1"=4' VERT.
THIS LINE SCALES 1" WHEN PLOTTED TO NOTED SCALE

| DESIGNED | DRAWN | CHECKED |
|---|---|---|
| AMM | AMM | TAB |

STATUS: ISSUED FOR BID
DATE: SEPTEMBER 2020
SHEET NO.
SA-1.7
17 OF 39

TOL-7448002SA-STA. 33+00 TO 38+50
11/4/2020 4:44 PM - AMITCHELL
11/4/2020 2:00 PM

# WABASH CANNONBALL TRAIL
## SANITARY SEWER
## PLAN AND PROFILE
## STA. 38+50 TO 44+00

VILLAGE OF WHITEHOUSE, OHIO WABASH CANONNBALL TRAIL
INTERCEPTOR SEWER & FINZEL ROAD PUMP STATION REHABILITATION

| NO. | DATE | REVISIONS AFTER ISSUED FOR BID | BY |
|---|---|---|---|
| 5 | 11-03-2020 | ALIGNMENT ADJUSTMENT | AMM |

Jones & Henry Engineers, Ltd.
Fluid thinking®
www.JHeng.com

JOB NO. 334-7448.002
SCALE 1"=20' HOR. 1"=4' VERT.
THIS LINE SCALES 1" WHEN PLOTTED TO NOTED SCALE

DESIGNED AMM | DRAWN AMM | CHECKED TAB
STATUS: ISSUED FOR BID
DATE: SEPTEMBER 2020
SHEET NO. SA-1.8
18 OF 39

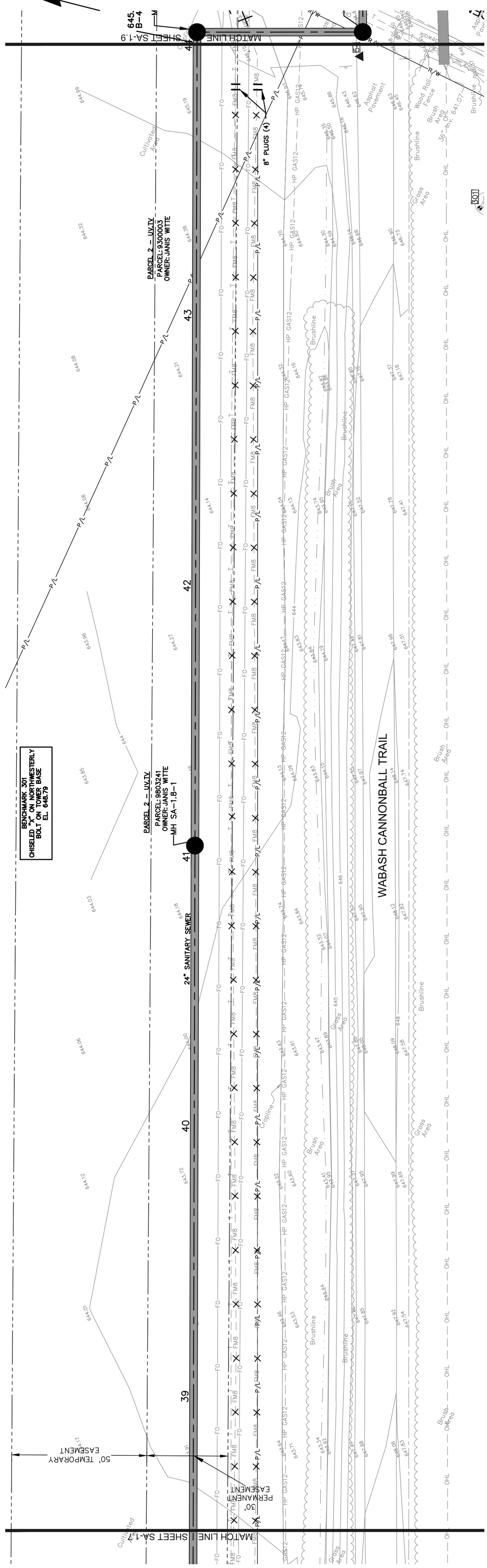


TOL-7448002SA-STA. 38+50 TO 44+00
11/4/2020 1:45 PM - AMITCHELL
11/4/2020 2:01 PM

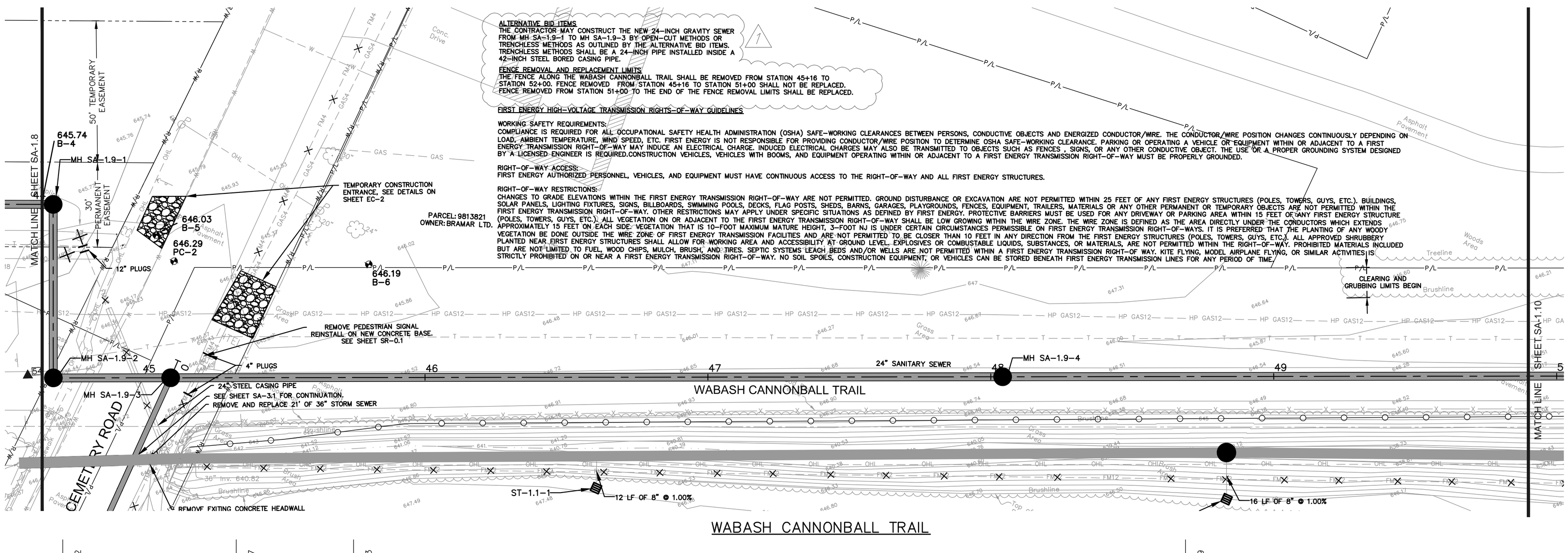


WABASH CANNONBALL TRAIL
SANITARY SEWER
PLAN AND PROFILE
STA. 44+00 TO 49+50

VILLAGE OF WHITEHOUSE, OHIO WABASH CANNONBALL TRAIL
INTERCEPTOR SEWER & FINZEL ROAD PUMP STATION REHABILITATION

| NO. | DATE | REVISIONS AFTER ISSUED FOR BID | BY |
|---|---|---|---|
| 5 | 11-03-2020 | ALIGNMENT ADJUSTMENT | AMM |
| 4 | | | |
| 3 | | | |
| 2 | | ALIGNMENT ADJUSTMENT | |
| 1 | 10-23-2020 | FENCE AND ALTERNATIVE BID NOTES | AMM |

Jones & Henry Engineers, Ltd.
Fluid thinking©.
www.JHeng.com

JOB NO. 334-7448.002
SCALE 1"=20' HOR. 1"=4' VERT.
THIS LINE SCALES 1" WHEN PLOTTED TO NOTED SCALE

| DESIGNED | DRAWN | CHECKED |
|---|---|---|
| AMM | AMM | TAB |

STATUS: ISSUED FOR BID
DATE: SEPTEMBER 2020
SHEET NO.
SA-1.9
19 OF 39

TOL-7448002SA-STA. 44+00 TO 49+50
11/4/2020 4:04 PM
11/4/2020 2:02 PM - AMITCHELL

PARCEL: 9813824
OWNER: DAVID BROWN

FENCE REMOVAL AND REPLACEMENT LIMITS
THE FENCE ALONG THE WABASH CANNONBALL TRAIL SHALL BE REMOVED FROM STATION 45+16 TO STATION 52+00. FENCE REMOVED FROM STATION 45+16 TO STATION 51+00 SHALL NOT BE REPLACED. FENCE REMOVED FROM STATION 51+00 TO THE END OF THE FENCE REMOVAL LIMITS SHALL BE REPLACED.

BENCHMARK 300
CHISELED "X" ON NORTHWESTERLY BOLT ON TOWER BASE
EL. 645.94

FIRST ENERGY HIGH-VOLTAGE TRANSMISSION RIGHTS-OF-WAY GUIDELINES

WORKING SAFETY REQUIREMENTS:
COMPLIANCE IS REQUIRED FOR ALL OCCUPATIONAL SAFETY HEALTH ADMINISTRATION (OSHA) SAFE-WORKING CLEARANCES BETWEEN PERSONS, CONDUCTIVE OBJECTS AND ENERGIZED CONDUCTOR/WIRE. THE CONDUCTOR/WIRE POSITION CHANGES CONTINUOUSLY DEPENDING ON LOAD, AMBIENT TEMPERATURE, WIND SPEED, ETC. FIRST ENERGY IS NOT RESPONSIBLE FOR PROVIDING CONDUCTOR/WIRE POSITION TO DETERMINE OSHA SAFE-WORKING CLEARANCE. PARKING OR OPERATING A VEHICLE OR EQUIPMENT WITHIN OR ADJACENT TO A FIRST ENERGY TRANSMISSION RIGHT-OF-WAY MAY INDUCE AN ELECTRICAL CHARGE. INDUCED ELECTRICAL CHARGES MAY ALSO BE TRANSMITTED TO OBJECTS SUCH AS FENCES , SIGNS, OR ANY OTHER CONDUCTIVE OBJECT. THE USE OF A PROPER GROUNDING SYSTEM DESIGNED BY A LICENSED ENGINEER IS REQUIRED.CONSTRUCTION VEHICLES, VEHICLES WITH BOOMS, AND EQUIPMENT OPERATING WITHIN OR ADJACENT TO A FIRST ENERGY TRANSMISSION RIGHT-OF-WAY MUST BE PROPERLY GROUNDED.

RIGHT-OF-WAY ACCESS:
FIRST ENERGY AUTHORIZED PERSONNEL, VEHICLES, AND EQUIPMENT MUST HAVE CONTINUOUS ACCESS TO THE RIGHT-OF-WAY AND ALL FIRST ENERGY STRUCTURES.

RIGHT-OF-WAY RESTRICTIONS:
CHANGES TO GRADE ELEVATIONS WITHIN THE FIRST ENERGY TRANSMISSION RIGHT-OF-WAY ARE NOT PERMITTED. GROUND DISTURBANCE OR EXCAVATION ARE NOT PERMITTED WITHIN 25 FEET OF ANY FIRST ENERGY STRUCTURES (POLES, TOWERS, GUYS, ETC.). BUILDINGS, SOLAR PANELS, LIGHTING FIXTURES, SIGNS, BILLBOARDS, SWIMMING POOLS, DECKS, FLAG POSTS, SHEDS, BARNS, GARAGES, PLAYGROUNDS, FENCES, EQUIPMENT, TRAILERS, MATERIALS OR ANY OTHER PERMANENT OR TEMPORARY OBJECTS ARE NOT PERMITTED WITHIN THE FIRST ENERGY TRANSMISSION RIGHT-OF-WAY. OTHER RESTRICTIONS MAY APPLY UNDER SPECIFIC SITUATIONS AS DEFINED BY FIRST ENERGY. PROTECTIVE BARRIERS MUST BE USED FOR ANY DRIVEWAY OR PARKING AREA WITHIN 15 FEET OF ANY FIRST ENERGY STRUCTURE (POLES, TOWERS, GUYS, ETC.). ALL VEGETATION ON OR ADJACENT TO THE FIRST ENERGY TRANSMISSION RIGHT-OF-WAY SHALL BE LOW GROWING WITHIN THE WIRE ZONE. THE WIRE ZONE IS DEFINED AS THE AREA DIRECTLY UNDER THE CONDUCTORS WHICH EXTENDS APPROXIMATELY 15 FEET ON EACH SIDE. VEGETATION THAT IS 10-FOOT MAXIMUM MATURE HEIGHT, 3-FOOT NJ IS UNDER CERTAIN CIRCUMSTANCES PERMISSIBLE ON FIRST ENERGY TRANSMISSION RIGHT-OF-WAYS. IT IS PREFERRED THAT THE PLANTING OF ANY WOODY VEGETATION BE DONE OUTSIDE THE WIRE ZONE OF FIRST ENERGY TRANSMISSION FACILITIES AND ARE NOT PERMITTED TO BE CLOSER THAN 10 FEET IN ANY DIRECTION FROM THE FIRST ENERGY STRUCTURES (POLES, TOWERS, GUYS, ETC.). ALL APPROVED SHRUBBERY PLANTED NEAR FIRST ENERGY STRUCTURES SHALL ALLOW FOR WORKING AREA AND ACCESSIBILITY AT GROUND LEVEL. EXPLOSIVES OR COMBUSTIBLE LIQUIDS, SUBSTANCES, OR MATERIALS, ARE NOT PERMITTED WITHIN THE RIGHT-OF-WAY. PROHIBITED MATERIALS INCLUDED BUT ARE NOT LIMITED TO FUEL, WOOD CHIPS, MULCH, BRUSH, AND TIRES. SEPTIC SYSTEMS LEACH BEDS AND/OR WELLS ARE NOT PERMITTED WITHIN A FIRST ENERGY TRANSMISSION RIGHT-OF WAY. KITE FLYING, MODEL AIRPLANE FLYING, OR SIMILAR ACTIVITIES IS STRICTLY PROHIBITED ON OR NEAR A FIRST ENERGY TRANSMISSION RIGHT-OF-WAY. NO SOIL SPOILS, CONSTRUCTION EQUIPMENT, OR VEHICLES CAN BE STORED BENEATH FIRST ENERGY TRANSMISSION LINES FOR ANY PERIOD OF TIME.

MATCH LINE SHEET SA-1.9

CLEARING AND GRUBBING LIMITS END

REMOVE AND REPLACE EXISTING WOOD FENCE, SEE NOTE 3.

MH SA-1.10-1

DITCH CROSSING, SEE NOTE 1 FOR ACCESS AND NOTE 2 FOR FLOW MAINTENANCE.

WABASH CANNONBALL TRAIL

644.76
B-7

646.58
PC-3

CONCRETE TRAFFIC BARRIER (ODOT NJ SHAPE PCB OR APPROVED EQUAL) (TYP.)

TRANSMISSION STRUCTURE 51

12" PLUGS

MH SA-1.10-2

24" SANITARY SEWER

BORE PIT

PARCEL 4 - TV
PARCEL: 9804154
OWNER: PHILLIP MAHN

50' TEMPORARY EASEMENT

BRIDGE WING WALL REMAINS. LIMITS OF FOUNDATION ARE UNKNOWN

BLUE CREEK

MATCH LINE SHEET SA-1.11

NOTES:
1. THE CONTRACTOR MAY CONSTRUCT A TEMPORARY EARTHEN EMBANKMENT TO PERMIT VEHICULAR ACCESS ACROSS THE STREAM. IF THIS ACCESS IS TO BE MAINTAINED DURING THE WORK, A 24-INCH MINIMUM DIAMETER PIPE SHALL BE PROVIDED TO CONVEY FLOWS UNDER THE TRAIL.
2. THE CONTRACTOR SHALL MAINTAIN THE FLOW IN THE STREAM WITH PUMPS IF THE CHANNEL IS BLOCKED FOR WORK.
3. THE CONTRACTOR SHALL CAREFULLY DISASSEMBLE THE EXISTING 3 BOARD AND CAP RAIL TREATED LUMBER WOOD FENCE. THE DISMANTLED FENCE SHALL BE REINSTALLED AT THE COMPLETION OF WORK IN THE AREA BY THE CONTRACTOR. ANY BOARDS, POSTS OR LAG BOLT HARDWARE DAMAGED DURING REMOVAL OR STORAGE SHALL BE REPLACED BY THE CONTRACTOR.

WABASH CANNONBALL TRAIL

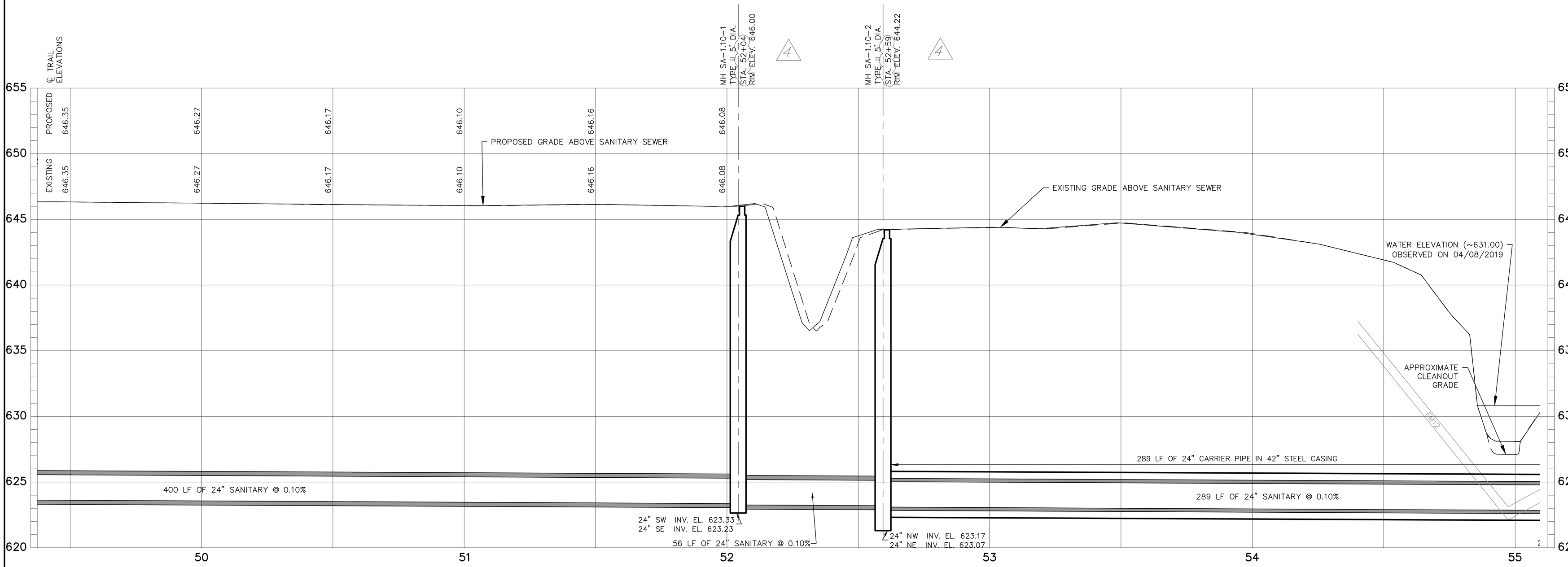


WABASH CANNONBALL TRAIL
SANITARY SEWER
PLAN AND PROFILE
STA. 49+50 TO 55+00

VILLAGE OF WHITEHOUSE, OHIO WABASH CANNONBALL TRAIL
INTERCEPTOR SEWER & FINZEL ROAD PUMP STATION REHABILTATION

| NO. | DATE | | BY |
|---|---|---|---|
| 5 | 11-03-2020 | ALIGNMENT ADJUSTMENT | AMM |
| 4 | | | |
| 3 | | | |
| 2 | 10-23-2020 | FENCE NOTES | AMM |
| 1 | | | |

REVISIONS AFTER ISSUED FOR BID

Jones & Henry Engineers, Ltd.
Fluid thinking®
www.JHeng.com

JOB NO. 334-7448.002
SCALE 1"=20' HOR. 1"=4' VERT.
THIS LINE SCALES 1" WHEN PLOTTED TO NOTED SCALE

| DESIGNED | DRAWN | CHECKED |
|---|---|---|
| AMM | AMM | TAB |

STATUS: ISSUED FOR BID
DATE: SEPTEMBER 2020
SHEET NO.
SA-1.10
20 OF 39

TOL-7448002SA-STA. 49+50 TO 55+00
11/4/2020 1:44 PM - AMITCHELL
11/4/2020 2:02 PM

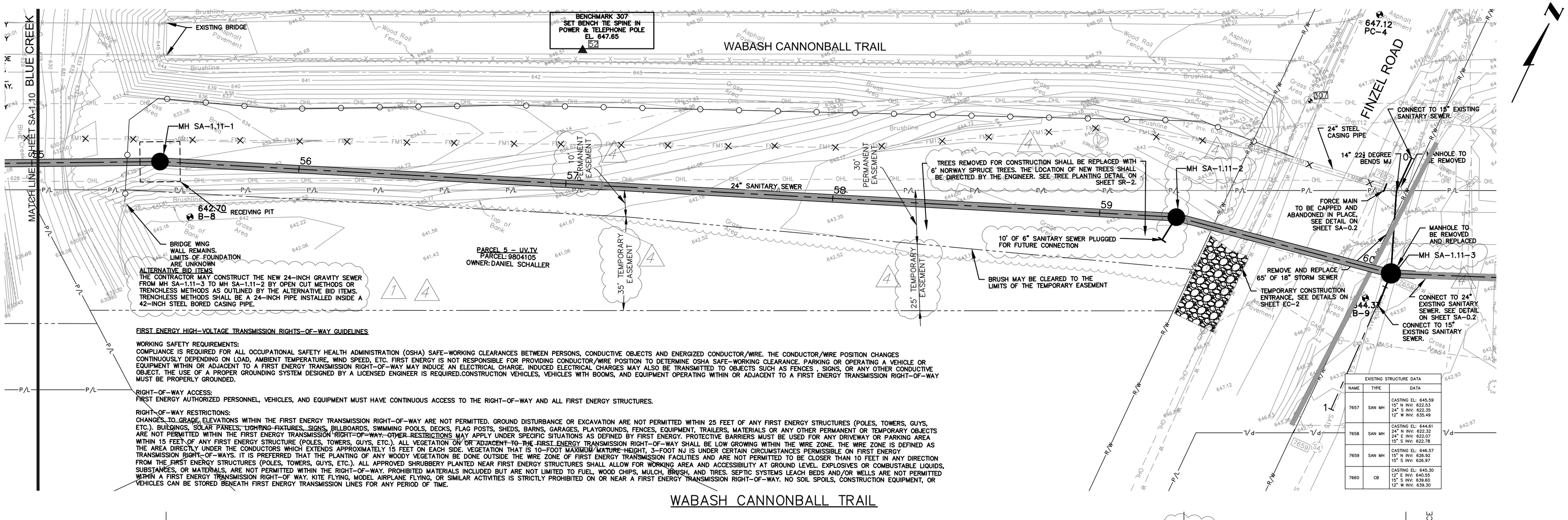


| EXISTING STRUCTURE DATA | | |
|---|---|---|
| NAME | TYPE | DATA |
| 7657 | SAN MH | CASTING EL: 645.59<br>15" N INV: 622.53<br>24" S INV: 622.35<br>12" W INV: 635.49 |
| 7658 | SAN MH | CASTING EL: 644.61<br>24" N INV: 622.32<br>24" E INV: 622.07<br>15" S INV: 622.78 |
| 7659 | SAN MH | CASTING EL: 646.57<br>15" N INV: 626.92<br>15" S INV: 626.97 |
| 7660 | CB | CASTING EL: 645.30<br>12" E INV: 640.55<br>15" S INV: 639.60<br>12" W INV: 639.30 |

FIRST ENERGY HIGH-VOLTAGE TRANSMISSION RIGHTS-OF-WAY GUIDELINES

WORKING SAFETY REQUIREMENTS:
COMPLIANCE IS REQUIRED FOR ALL OCCUPATIONAL SAFETY HEALTH ADMINISTRATION (OSHA) SAFE-WORKING CLEARANCES BETWEEN PERSONS, CONDUCTIVE OBJECTS AND ENERGIZED CONDUCTOR/WIRE. THE CONDUCTOR/WIRE POSITION CHANGES CONTINUOUSLY DEPENDING ON LOAD, AMBIENT TEMPERATURE, WIND SPEED, ETC. FIRST ENERGY IS NOT RESPONSIBLE FOR PROVIDING CONDUCTOR/WIRE POSITION TO DETERMINE OSHA SAFE-WORKING CLEARANCE. PARKING OR OPERATING A VEHICLE OR EQUIPMENT WITHIN OR ADJACENT TO A FIRST ENERGY TRANSMISSION RIGHT-OF-WAY MAY INDUCE AN ELECTRICAL CHARGE. INDUCED ELECTRICAL CHARGES MAY ALSO BE TRANSMITTED TO OBJECTS SUCH AS FENCES , SIGNS, OR ANY OTHER CONDUCTIVE OBJECT. THE USE OF A PROPER GROUNDING SYSTEM DESIGNED BY A LICENSED ENGINEER IS REQUIRED.CONSTRUCTION VEHICLES, VEHICLES WITH BOOMS, AND EQUIPMENT OPERATING WITHIN OR ADJACENT TO A FIRST ENERGY TRANSMISSION RIGHT-OF-WAY MUST BE PROPERLY GROUNDED.

RIGHT-OF-WAY ACCESS:
FIRST ENERGY AUTHORIZED PERSONNEL, VEHICLES, AND EQUIPMENT MUST HAVE CONTINUOUS ACCESS TO THE RIGHT-OF-WAY AND ALL FIRST ENERGY STRUCTURES.

RIGHT-OF-WAY RESTRICTIONS:
CHANGES TO GRADE, ELEVATIONS WITHIN THE FIRST ENERGY TRANSMISSION RIGHT-OF-WAY ARE NOT PERMITTED. GROUND DISTURBANCE OR EXCAVATION ARE NOT PERMITTED WITHIN 25 FEET OF ANY FIRST ENERGY STRUCTURES (POLES, TOWERS, GUYS, ETC.). BUILDINGS, SOLAR PANELS, LIGHTING FIXTURES, SIGNS, BILLBOARDS, SWIMMING POOLS, DECKS, FLAG POSTS, SHEDS, BARNS, GARAGES, PLAYGROUNDS, FENCES, EQUIPMENT, TRAILERS, MATERIALS OR ANY OTHER PERMANENT OR TEMPORARY OBJECTS ARE NOT PERMITTED WITHIN THE FIRST ENERGY TRANSMISSION RIGHT-OF-WAY. OTHER RESTRICTIONS MAY APPLY UNDER SPECIFIC SITUATIONS AS DEFINED BY FIRST ENERGY. PROTECTIVE BARRIERS MUST BE USED FOR ANY DRIVEWAY OR PARKING AREA WITHIN 15 FEET OF ANY FIRST ENERGY STRUCTURE (POLES, TOWERS, GUYS, ETC.). ALL VEGETATION ON OR ADJACENT TO THE FIRST ENERGY TRANSMISSION RIGHT-OF-WAY SHALL BE LOW GROWING WITHIN THE WIRE ZONE. THE WIRE ZONE IS DEFINED AS THE AREA DIRECTLY UNDER THE CONDUCTORS WHICH EXTENDS APPROXIMATELY 15 FEET ON EACH SIDE. VEGETATION THAT IS 10-FOOT MAXIMUM MATURE HEIGHT, 3-FOOT NJ IS UNDER CERTAIN CIRCUMSTANCES PERMISSIBLE ON FIRST ENERGY TRANSMISSION RIGHT-OF-WAYS. IT IS PREFERRED THAT THE PLANTING OF ANY WOODY VEGETATION BE DONE OUTSIDE THE WIRE ZONE OF FIRST ENERGY TRANSMISSION FACILITES AND ARE NOT PERMITTED TO BE CLOSER THAN 10 FEET IN ANY DIRECTION FROM THE FIRST ENERGY STRUCTURES (POLES, TOWERS, GUYS, ETC.). ALL APPROVED SHRUBBERY PLANTED NEAR FIRST ENERGY STRUCTURES SHALL ALLOW FOR WORKING AREA AND ACCESSIBILITY AT GROUND LEVEL. EXPLOSIVES OR COMBUSTABLE LIQUIDS, SUBSTANCES, OR MATERIALS, ARE NOT PERMITTED WITHIN THE RIGHT-OF-WAY. PROHIBITED MATERIALS INCLUDED BUT ARE NOT LIMITED TO FUEL, WOOD CHIPS, MULCH, BRUSH, AND TIRES. SEPTIC SYSTEMS LEACH BEDS AND/OR WELLS ARE NOT PERMITTED WITHIN A FIRST ENERGY TRANSMISSION RIGHT-OF WAY. KITE FLYING, MODEL AIRPLANE FLYING, OR SIMILAR ACTIVITIES IS STRICTLY PROHIBITED ON OR NEAR A FIRST ENERGY TRANSMISSION RIGHT-OF-WAY. NO SOIL SPOILS, CONSTRUCTION EQUIPMENT, OR VEHICLES CAN BE STORED BENEATH FIRST ENERGY TRANSMISSION LINES FOR ANY PERIOD OF TIME.

WABASH CANNONBALL TRAIL

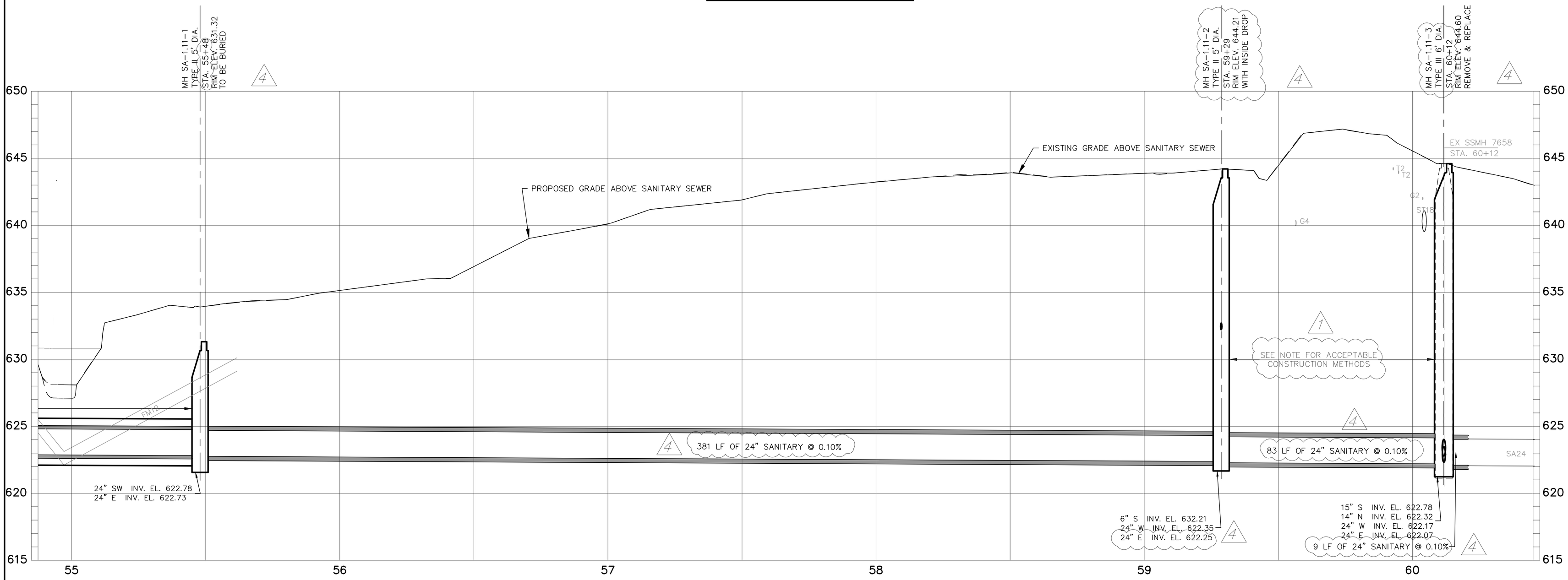


WABASH CANNONBALL TRAIL
SANITARY SEWER
PLAN AND PROFILE
STA. 55+00 TO 60+21

VILLAGE OF WHITEHOUSE, OHIO WABASH CANNONBALL TRAIL
INTERCEPTOR SEWER & FINZEL ROAD PUMP STATION REHABILITATION

| NO. | DATE | REVISIONS AFTER ISSUED FOR BID | BY |
|---|---|---|---|
| 5 | 11-05-2020 | ALIGNMENT ADJUSTMENT AND EASEMENT CHANGES | AMM |
| 4 | | | |
| 3 | | | |
| 2 | | | |
| 1 | 10-23-2020 | ALTERNATIVE BID NOTE | AMM |

Jones & Henry Engineers, Ltd.
Fluid thinking®.
www.JHeng.com

JOB NO. 334-7448.002
SCALE 1"=20' HOR. 1"=4' VERT.
THIS LINE SCALES 1" WHEN PLOTTED TO NOTED SCALE

| DESIGNED | DRAWN | CHECKED |
|---|---|---|
| AMM | AMM | TAB |

STATUS: ISSUED FOR BID
DATE: SEPTEMBER 2020
SHEET NO.
SA-1.11
21 OF 39

TQL-7448002SA-STA. 55+00 TO 60+21
11/4/2020 1:45 PM - AMITCHELL
11/4/2020 2:04 PM

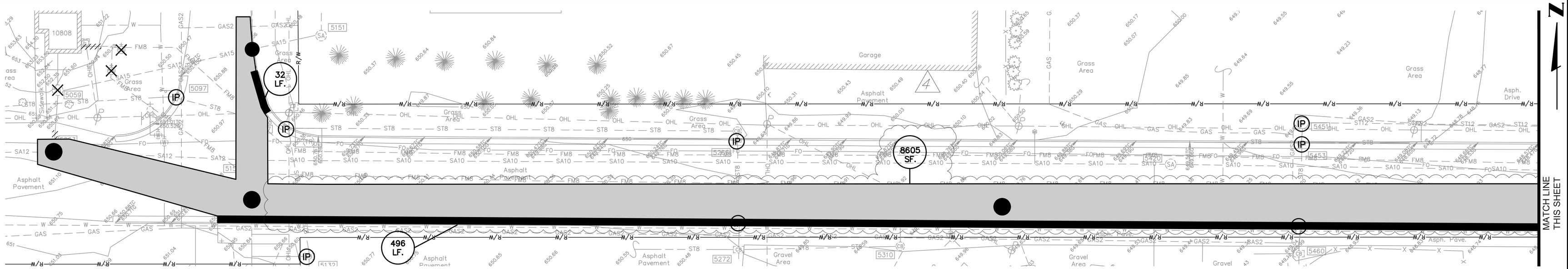


LOGAN STREET AND FIELD AVENUE

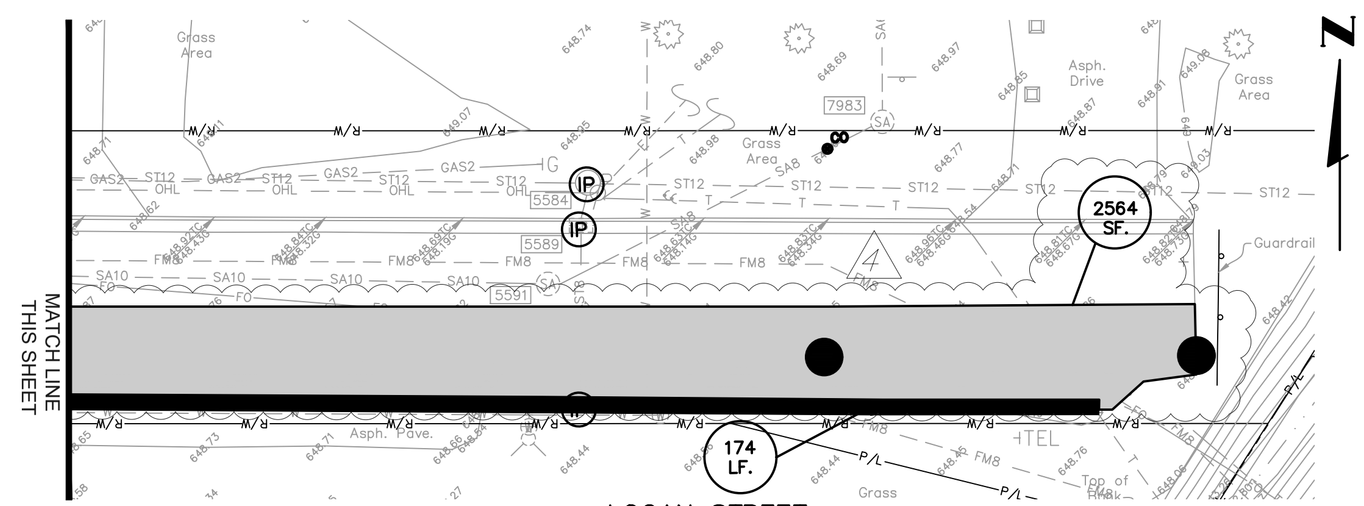


LOGAN STREET

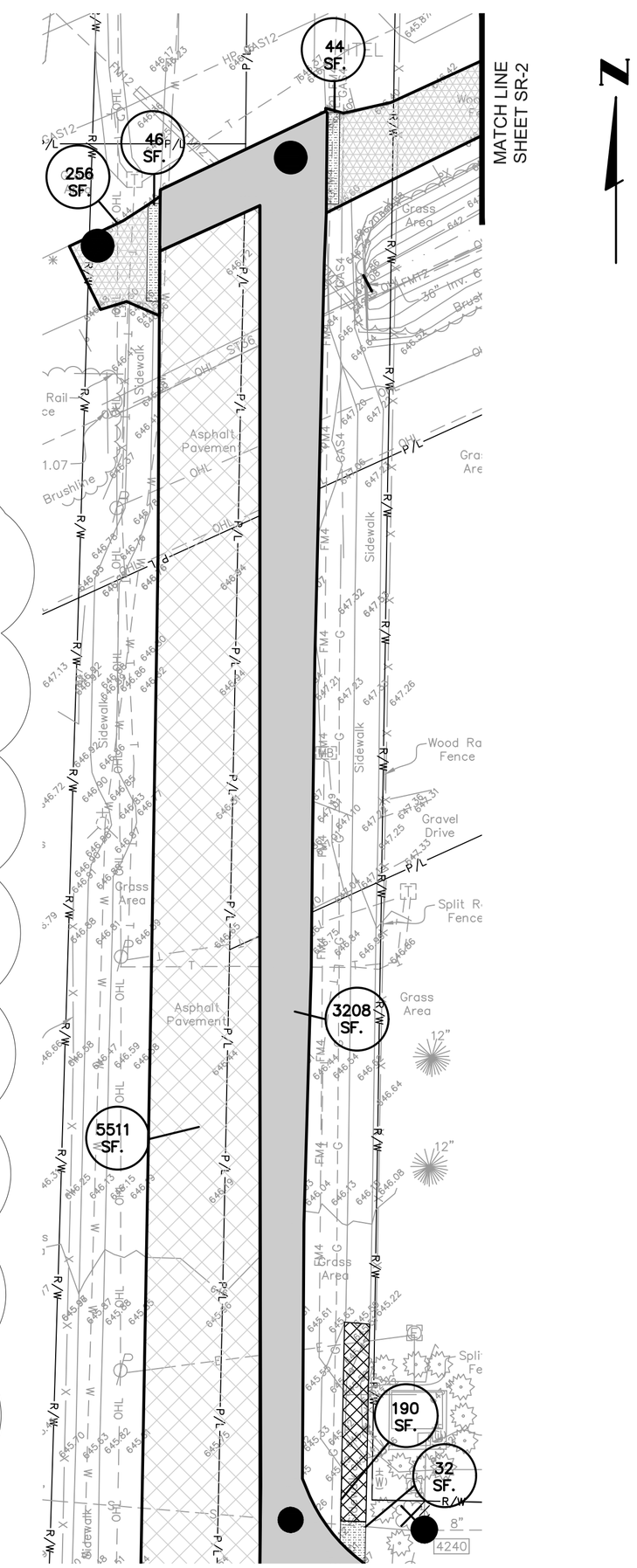


CEMETERY ROAD AND WABASH CANNONBALL TRAIL

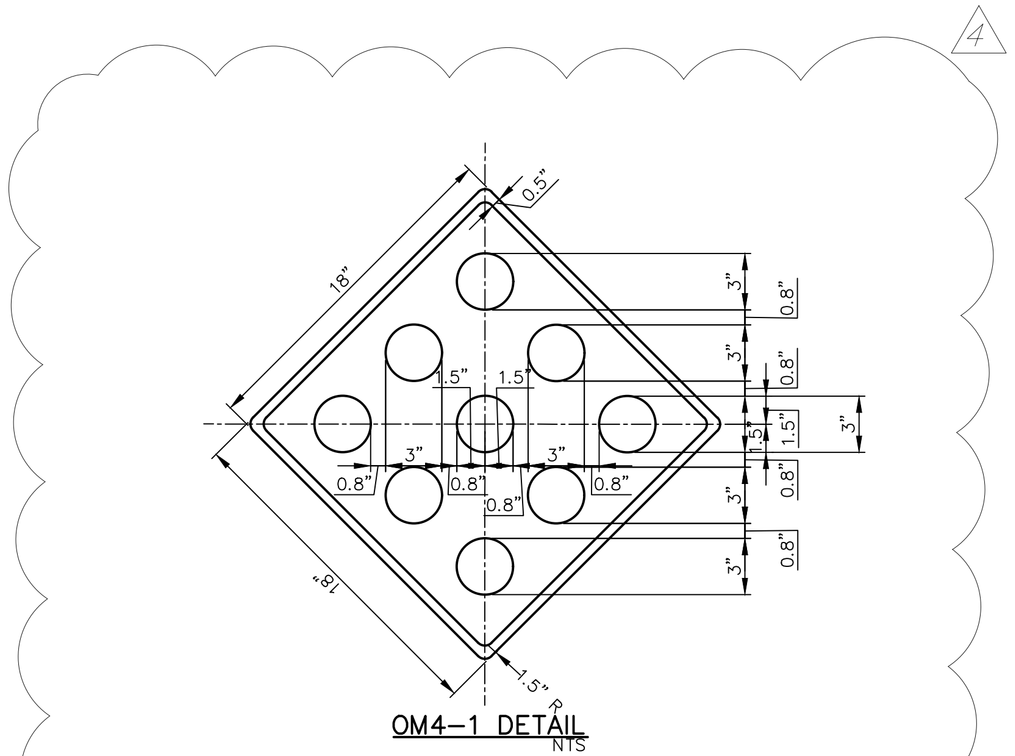


OM4-1 DETAIL
NTS

NOTE:
1. REFLECTOR, BORDER, BACKGROUND ARE TO BE THE COLOR RED.
2. SIGN TO BE MOUNTED ON POST.

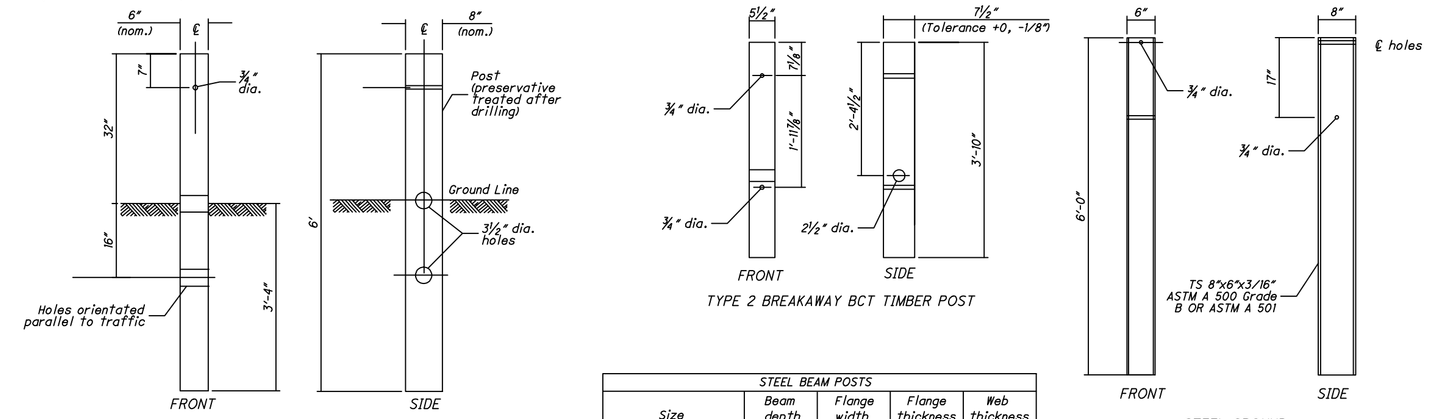


TYPE 1 BREAKAWAY CRT POST

TYPE 2 BREAKAWAY BCT TIMBER POST

STEEL GROUND FOUNDATION TUBE

| STEEL BEAM POSTS | | | | |
|---|---|---|---|---|
| Size | Beam depth | Flange width | Flange thickness | Web thickness |
| Rolled W6x8.5 | 5.8" | 3.94" | 0.193" | 0.170" |
| Rolled W6x9 | 5.9" | 3.94" | 0.215" | 0.170" |
| Welded 6x8.5 | 6.0" | 3.94" | 0.193" | 0.170" |
| Welded 6x9 | 6.0" | 3.94" | 0.215" | 0.170" |

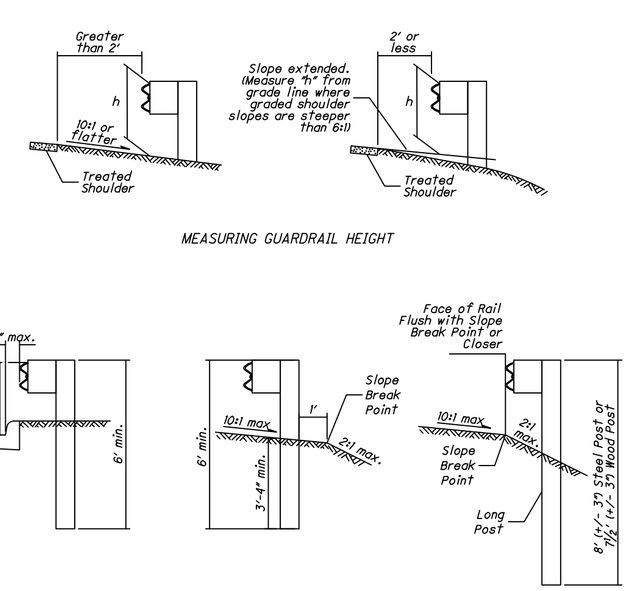


MEASURING GUARDRAIL HEIGHT

GUARDRAIL POST LENGTH AND POSITION

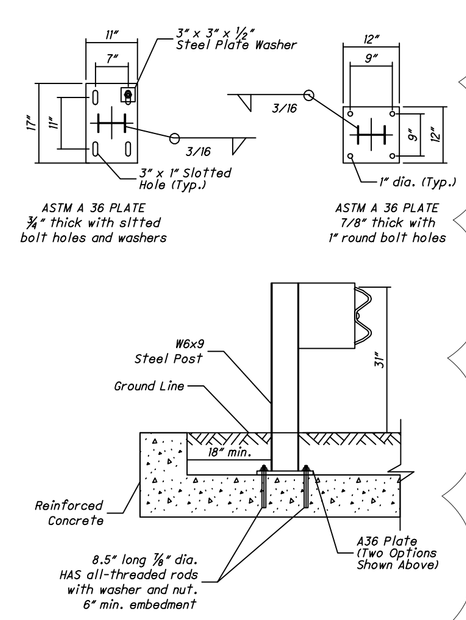


ASTM A 36 PLATE ¾" thick with slitted bolt holes and washers

ASTM A 36 PLATE 7/8" thick with 1" round bolt holes

FOOTING ANCHOR DETAIL

## NOTES

GUARDRAIL HEIGHT: For initial installation, construct the guardrail within ± 1" of the standard 31" height to the top of W-Beam rail. When subsequent projects, such as resurfacings, affect the height of existing guardrail, adjustment is not required if the finished height is within ±3" of the standard height.

POSTS: The Standard Post Length is 6'-0" (+3",-0" tolerance). Wood Posts are permitted instead of Standard Steel Posts per CMS 710.11.

POST EMBEDMENT DEPTH: Standard embedment depth is 3'-4" minimum. Embedment depth shall be 37" when using the round wooden post option. Do not drive posts located over a culvert with less than 4'-3" of cover; instead set in drilled or dug holes. Where site constraints prohibit the post from being placed at least one foot in front of the slope break point, use longer posts as shown in the Guardrail Post Length and Position Detail. The face of the rail may not be beyond the slope break point.

SPECIAL POST MOUNTINGS: Install posts located over a drainage inlet or structure with a cover of less than 3'-4" as shown in the FOOTING ANCHOR Detail.

ANCHORS: Holes shall comply with CMS 510. Use non-shrink, nonmetallic grout per CMS 705.20.

PROTECTIVE COATING: In lieu of the complying with CMS 710.06, coat expansion shields, anchors and concrete insert anchor assemblies embedded in concrete in accordance with ASTM A 153 or be of stainless steel. Any bolts screwed into these devices shall meet CMS 710.06.

PAYMENT: Payment for standard guardrail is measured in feet as Item 606 - Guardrail, Type MGS. Runs with longer posts should be paid as Item 606 - Guardrail, Type MGS With Long Posts, also measured in feet. All costs associated with special post mountings are included in the unit price bid of Item 606 Guardrail of the type specified in the plans.

OHIO DEPARTMENT OF TRANSPORTATION STANDARD ROADWAY CONSTRUCTION GUARDRAIL DETAILS
NTS

## LEGEND

- ROADWAY ASPHALT-PAVEMENT, SEE TYPICAL SECTION ON SHEET SR-0.1
- TRAIL ASPHALT-PAVEMENT, SEE TYPICAL SECTION ON SHEET SR-0.1 & CROSS SECTIONS ON SHEET CS-1
- ASPHALT PAVEMENT PLANING & RESURFACING, SEE TYPICAL SECTION ON SHEET SR-0.1
- 8" CONCRETE DRIVE, SEE DETAIL ON SHEET SR-0.1
- 4" CONCRETE WALK, SEE DETAIL ON SHEET SR-0.1
- 6" OR 8" CURB RAMP WITH DETECTABLE WARNING, SEE DETAIL ON SHEET SR-0.1
- CURB AND GUTTER TYPE 2, SEE DETAIL ON SHEET SR-0.1
- (IP) INLET PROTECTION, SEE DETAIL ON SHEET EC-2
- (RCE) ROADWAY CONSTRUCTION ENTRANCE, SEE DETAIL ON SHEET EC-2

NOTE:
THE LIMITS OF THE REQUIRED SURFACE REPAIRS ASSOCIATED WITH THE WORK IMPROVEMENTS ARE SHOWN ON THIS SHEET. THE LIMITS FOR SURFACE IMPROVEMENTS SHOWN ON THIS SHEET SHALL BE BASED UPON THE SPECIFIED PAY LIMITS EXCEPTING ADDITIONAL AREAS EXPANDED AS SHOWN. RESTORATION OF SURFACE FACILITIES DAMAGED BEYOND THESE LIMITS SHOWN SHALL NOT BE INCLUDED FOR PAYMENT UNLESS APPROVED BY THE ENGINEER.

FIELD AVENUE, LOGAN STREET AND
WABASH CANNONBALL TRAIL
SURFACE RESTORATION PLANS

VILLAGE OF WHITEHOUSE, OHIO WABASH CANNONBALL TRAIL
INTERCEPTOR SEWER & FINZEL ROAD PUMP STATION REHABILITATION

| NO. | DATE | REVISIONS AFTER ISSUED FOR BID | BY |
|---|---|---|---|
| 5 | 11-03-2020 | PAVEMENT CHANGES AND SIGN & GUARDRAIL DETAILS | AMM |
| 4 | | | |
| 3 | | | |
| 2 | | | |
| 1 | | | |

Jones & Henry Engineers, Ltd.
Fluid thinking®.
www.JHeng.com

JOB NO. 334-7448.002

SCALE 1" = 20'

THIS LINE SCALES 1" WHEN PLOTTED TO NOTED SCALE

| DESIGNED | DRAWN | CHECKED |
|---|---|---|
| AMM | AMM | TAB |

STATUS: ISSUED FOR BID
DATE: SEPTEMBER 2020

SHEET NO.
SR-1
31 OF 39

TOL:-7448002R-SURFACE RESTORATION I
11/4/2020 9:22 AM - AMITCHELL
11/4/2020 2:07 PM

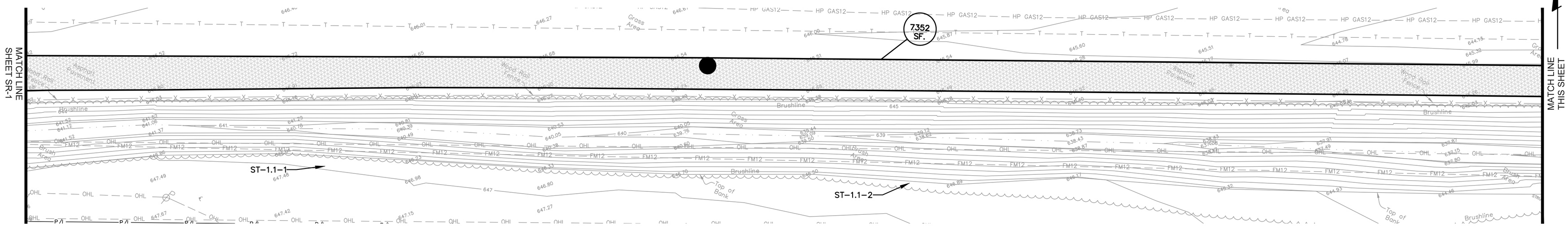


WABASH CANNONBALL TRAIL

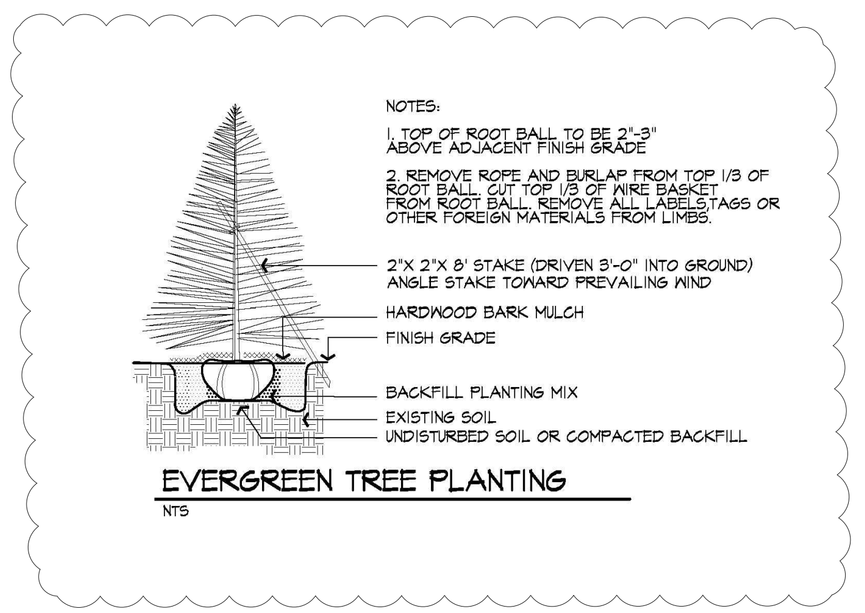


EVERGREEN TREE PLANTING

NTS

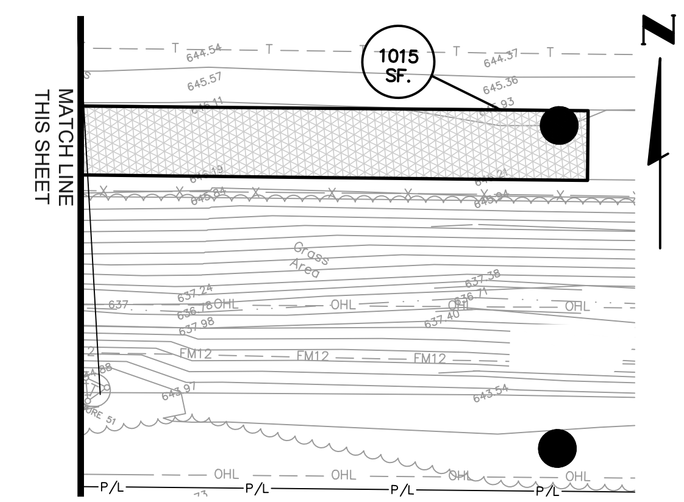


WABASH CANNONBALL TRAIL

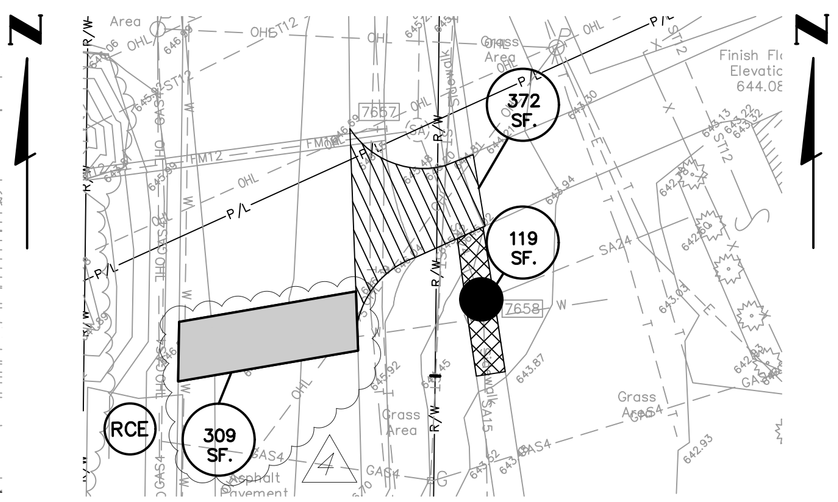


FINZEL ROAD

## LEGEND

- ROADWAY ASPHALT-PAVEMENT, SEE TYPICAL SECTION ON SHEET SR-0.1
- TRAIL ASPHALT-PAVEMENT, SEE TYPICAL SECTION ON SHEET SR-0.1 & CROSS SECTIONS ON SHEET CS-1
- ASPHALT PAVEMENT PLANING & RESURFACING, SEE TYPICAL SECTION ON SHEET SR-0.1
- 8" CONCRETE DRIVE, SEE DETAIL ON SHEET SR-0.1
- 4" CONCRETE WALK, SEE DETAIL ON SHEET SR-0.1
- 6" OR 8" CURB RAMP WITH DETECTABLE WARNING, SEE DETAIL ON SHEET SR-0.1
- CURB AND GUTTER TYPE 2, SEE DETAIL ON SHEET SR-0.1
- (P) INLET PROTECTION, SEE DETAIL ON SHEET EC-2
- (RCE) ROADWAY CONSTRUCTION ENTRANCE, SEE DETAIL ON SHEET EC-2

NOTE:
THE LIMITS OF THE REQUIRED SURFACE REPAIRS ASSOCIATED WITH THE WORK IMPROVEMENTS ARE SHOWN ON THIS SHEET. THE LIMITS FOR SURFACE IMPROVEMENTS SHOWN ON THIS SHEET SHALL BE BASED UPON THE SPECIFIED PAY LIMITS EXCEPTING ADDITIONAL AREAS EXPANDED AS SHOWN. RESTORATION OF SURFACE FACILITIES DAMAGED BEYOND THESE LIMITS SHOWN SHALL NOT BE INCLUDED FOR PAYMENT UNLESS APPROVED BY THE ENGINEER.

# WABASH CANNONBALL TRAIL AND FINZEL ROAD SURFACE RESTORATION PLANS

VILLAGE OF WHITEHOUSE, OHIO WABASH CANNONBALL TRAIL
INTERCEPTOR SEWER & FINZEL ROAD PUMP STATION REHABILITATION

| NO. | DATE | REVISIONS AFTER ISSUED FOR BID | BY |
|---|---|---|---|
| 5 | 11-03-2020 | PAVEMENT CHANGES AND TREE PLANTING DETAIL | AMM |
| 4 | | | |
| 3 | | | |
| 2 | | | |
| 1 | | | |

Jones & Henry Engineers, Ltd.
Fluid thinking©
www.JHeng.com

JOB NO. 334-7448.002

SCALE 1" = 20'

THIS LINE SCALES 1" WHEN PLOTTED TO NOTED SCALE

| DESIGNED | DRAWN | CHECKED |
|---|---|---|
| AMM | AMM | TAB |

STATUS: ISSUED FOR BID
DATE: SEPTEMBER 2020

SHEET NO.
SR-2
32 OF 39

TOL-7448\002SR-SURFACE RESTORATION 2
11/4/2020 10:22 AM - AMITCHELL
11/4/2020 2:05 PM

"General Decision Number: OH20200088 07/31/2020

Superseded General Decision Number: OH20190088

State: Ohio

Construction Type: Building

County: Lucas County in Ohio.

BUILDING CONSTRUCTION PROJECTS (does not include single family homes or apartments up to and including 4 stories).

Note: Under Executive Order (EO) 13658, an hourly minimum wage of $10.80 for calendar year 2020 applies to all contracts subject to the Davis-Bacon Act for which the contract is awarded (and any solicitation was issued) on or after January 1, 2015. If this contract is covered by the EO, the contractor must pay all workers in any classification listed on this wage determination at least $10.80 per hour (or the applicable wage rate listed on this wage determination, if it is higher) for all hours spent performing on the contract in calendar year 2020. If this contract is covered by the EO and a classification considered necessary for performance of work on the contract does not appear on this wage determination, the contractor must pay workers in that classification at least the wage rate determined through the conformance process set forth in 29 CFR 5.5(a)(1)(ii) (or the EO minimum wage rate,if it is higher than the conformed wage rate). The EO minimum wage rate will be adjusted annually. Please note that this EO applies to the above-mentioned types of contracts entered into by the federal government that are subject to the Davis-Bacon Act itself, but it does not apply to contracts subject only to the Davis-Bacon Related Acts, including those set forth at 29 CFR 5.1(a)(2)-(60). Additional information on contractor requirements and worker protections under the EO is available at www.dol.gov/whd/govcontracts.

| Modification Number | Publication Date |
|---|---|
| 0 | 01/03/2020 |
| 1 | 05/01/2020 |
| 2 | 06/12/2020 |
| 3 | 07/17/2020 |
| 4 | 07/31/2020 |

ASBE0045-004 07/01/2018

| | Rates | Fringes |
|---|---|---|
| ASBESTOS WORKER/HEAT & FROST INSULATOR | $ 31.35 | 15.59 |

---

BROH0003-006 07/01/2019

| | Rates | Fringes |
|---|---|---|
| BRICKLAYER | $ 31.10 | 20.44 |
| TERRAZZO WORKER/SETTER | $ 31.17 | 16.00 |
| TILE FINISHER | $ 26.80 | 10.38 |
| TILE SETTER | $ 31.17 | 16.00 |

---

CARP0248-010 05/01/2014

```
                                  Rates          Fringes

CARPENTER (Drywall Hanging
and Metal Stud Installation
Only)..........................$ 28.22           17.77
----------------------------------------------------------------
 CARP0351-002 05/01/2016

                                  Rates          Fringes

CARPENTER (Excluding Drywall
Hanging and Metal Stud
Installation)..................$ 28.63           19.51
----------------------------------------------------------------
* ELEC0008-015 05/25/2020

                                  Rates          Fringes

ELECTRICIAN (Excludes Low
Voltage Wiring)................$ 41.81       4.5%+20.73
----------------------------------------------------------------
 ELEC0008-016 12/24/2018

                                  Rates          Fringes

ELECTRICIAN: CABLE PULLER
(Voice/Data/Video)............$ 12.50        1.5%+2.50
----------------------------------------------------------------
 ELEC0008-017 08/28/2017

                                  Rates          Fringes

ELECTRICIAN (Low Voltage
Wiring Only)...................$ 27.63       4.5%+12.79
----------------------------------------------------------------
 ENGI0018-048 05/01/2018

                                  Rates          Fringes

POWER EQUIPMENT OPERATOR
     Backhoe/Excavator/Trackhoe;
     Crane.....................$ 36.64           15.09
----------------------------------------------------------------
 ENGI0066-045 06/01/2017

                                  Rates          Fringes

POWER EQUIPMENT OPERATOR
     Forklift..................$ 28.87           19.66
     Grader/Blade..............$ 32.42           19.66
     Mechanic..................$ 32.92           19.66
----------------------------------------------------------------
 IRON0044-020 06/01/2020

                                  Rates          Fringes

IRONWORKER, ORNAMENTAL..........$ 30.47           21.20
----------------------------------------------------------------
 IRON0055-012 07/01/2017

                                  Rates          Fringes

IRONWORKER, STRUCTURAL
(Including Metal Building
Structural Frame Installation)...$ 29.77           21.30
```

```
---------------------------------------------------------------
 LABO0500-005 07/01/2019

                                  Rates          Fringes

LABORER
     Common or General; Mason
     Tender - Cement/Concrete....$ 27.43            13.95
---------------------------------------------------------------
 PAIN0007-004 07/01/2019

                                  Rates          Fringes

PAINTER
     Brush and Roller............$ 26.39            17.79
     Fireproofer.................$ 27.39            17.79
     Spray.......................$ 27.39            17.79
---------------------------------------------------------------
 PAIN0948-002 07/01/2019

                                  Rates          Fringes

GLAZIER.........................$ 28.00            17.62
---------------------------------------------------------------
 PLAS0526-017 06/01/2018

                                  Rates          Fringes

PLASTERER.......................$ 27.45            15.56
---------------------------------------------------------------
 PLAS0886-002 07/01/2018

                                  Rates          Fringes

CEMENT MASON/CONCRETE FINISHER...$ 29.08            20.95
---------------------------------------------------------------
 PLAS0886-008 07/01/2018

                                  Rates          Fringes

PAINTER: Drywall
Finishing/Taping Only...........$ 29.08            20.95
---------------------------------------------------------------
 PLUM0050-013 07/06/2020

                                  Rates          Fringes

PIPEFITTER (Includes HVAC
Pipe Installation)..............$ 43.60            26.73
PLUMBER (Excludes HVAC Pipe
Installation)...................$ 43.60            26.73
---------------------------------------------------------------
 ROOF0134-006 07/01/2019

                                  Rates          Fringes

ROOFER..........................$ 28.02            20.04
---------------------------------------------------------------
 SFOH0669-009 01/02/2020

                                  Rates          Fringes

SPRINKLER FITTER (Fire
Sprinklers).....................$ 37.88            23.96
---------------------------------------------------------------
```

```
 SHEE0033-048 07/01/2019

                                  Rates          Fringes

SHEET METAL WORKER (Including
HVAC Duct Installation)..........$ 33.82            30.19
----------------------------------------------------------------
* UAVG-OH-0021 01/01/2019

                                  Rates          Fringes

OPERATOR:  Oiler................$ 27.56            16.37
----------------------------------------------------------------
  SUOH2012-090 08/29/2014

                                  Rates          Fringes

IRONWORKER, REINFORCING..........$ 28.11            17.83

LABORER:  Mason Tender - Brick...$ 18.39            11.04

LABORER:  Pipelayer.............$ 23.98             8.58

OPERATOR:  Bobcat/Skid
Steer/Skid Loader................$ 30.26            12.58

OPERATOR:  Bulldozer............$ 28.07            11.15

OPERATOR:  Loader...............$ 29.66            12.61

OPERATOR:  Paver  (Asphalt,
Aggregate, and Concrete).........$ 30.28            13.29

OPERATOR:  Roller...............$ 28.83            12.72

TRUCK DRIVER: Dump (All Types)...$ 24.32            11.73
----------------------------------------------------------------

WELDERS - Receive rate prescribed for craft performing
operation to which welding is incidental.

================================================================

Note: Executive Order (EO) 13706, Establishing Paid Sick Leave
for Federal Contractors applies to all contracts subject to the
Davis-Bacon Act for which the contract is awarded (and any
solicitation was issued) on or after January 1, 2017.  If this
contract is covered by the EO, the contractor must provide
employees with 1 hour of paid sick leave for every 30 hours
they work, up to 56 hours of paid sick leave each year.
Employees must be permitted to use paid sick leave for their
own illness, injury or other health-related needs, including
preventive care; to assist a family member (or person who is
like family to the employee) who is ill, injured, or has other
health-related needs, including preventive care; or for reasons
resulting from, or to assist a family member (or person who is
like family to the employee) who is a victim of, domestic
violence, sexual assault, or stalking.  Additional information
on contractor requirements and worker protections under the EO
is available at www.dol.gov/whd/govcontracts.

Unlisted classifications needed for work not included within
the scope of the classifications listed may be added after
award only as provided in the labor standards contract clauses
(29CFR 5.5 (a) (1) (ii)).
```

---

The body of each wage determination lists the classification and wage rates that have been found to be prevailing for the cited type(s) of construction in the area covered by the wage determination. The classifications are listed in alphabetical order of ""identifiers"" that indicate whether the particular rate is a union rate (current union negotiated rate for local), a survey rate (weighted average rate) or a union average rate (weighted union average rate).

Union Rate Identifiers

A four letter classification abbreviation identifier enclosed in dotted lines beginning with characters other than ""SU"" or ""UAVG"" denotes that the union classification and rate were prevailing for that classification in the survey. Example: PLUM0198-005 07/01/2014. PLUM is an abbreviation identifier of the union which prevailed in the survey for this classification, which in this example would be Plumbers. 0198 indicates the local union number or district council number where applicable, i.e., Plumbers Local 0198. The next number, 005 in the example, is an internal number used in processing the wage determination. 07/01/2014 is the effective date of the most current negotiated rate, which in this example is July 1, 2014.

Union prevailing wage rates are updated to reflect all rate changes in the collective bargaining agreement (CBA) governing this classification and rate.

Survey Rate Identifiers

Classifications listed under the ""SU"" identifier indicate that no one rate prevailed for this classification in the survey and the published rate is derived by computing a weighted average rate based on all the rates reported in the survey for that classification. As this weighted average rate includes all rates reported in the survey, it may include both union and non-union rates. Example: SULA2012-007 5/13/2014. SU indicates the rates are survey rates based on a weighted average calculation of rates and are not majority rates. LA indicates the State of Louisiana. 2012 is the year of survey on which these classifications and rates are based. The next number, 007 in the example, is an internal number used in producing the wage determination. 5/13/2014 indicates the survey completion date for the classifications and rates under that identifier.

Survey wage rates are not updated and remain in effect until a new survey is conducted.

Union Average Rate Identifiers

Classification(s) listed under the UAVG identifier indicate that no single majority rate prevailed for those classifications; however, 100% of the data reported for the classifications was union data. EXAMPLE: UAVG-OH-0010 08/29/2014. UAVG indicates that the rate is a weighted union average rate. OH indicates the state. The next number, 0010 in the example, is an internal number used in producing the wage determination. 08/29/2014 indicates the survey completion date for the classifications and rates under that identifier.

A UAVG rate will be updated once a year, usually in January of each year, to reflect a weighted average of the current negotiated/CBA rate of the union locals from which the rate is based.

---

WAGE DETERMINATION APPEALS PROCESS

1.) Has there been an initial decision in the matter? This can be:

* an existing published wage determination
* a survey underlying a wage determination
* a Wage and Hour Division letter setting forth a position on a wage determination matter
* a conformance (additional classification and rate) ruling

On survey related matters, initial contact, including requests for summaries of surveys, should be with the Wage and Hour Regional Office for the area in which the survey was conducted because those Regional Offices have responsibility for the Davis-Bacon survey program. If the response from this initial contact is not satisfactory, then the process described in 2.) and 3.) should be followed.

With regard to any other matter not yet ripe for the formal process described here, initial contact should be with the Branch of Construction Wage Determinations. Write to:

Branch of Construction Wage Determinations
Wage and Hour Division
U.S. Department of Labor
200 Constitution Avenue, N.W.
Washington, DC 20210

2.) If the answer to the question in 1.) is yes, then an interested party (those affected by the action) can request review and reconsideration from the Wage and Hour Administrator (See 29 CFR Part 1.8 and 29 CFR Part 7). Write to:

Wage and Hour Administrator
U.S. Department of Labor
200 Constitution Avenue, N.W.
Washington, DC 20210

The request should be accompanied by a full statement of the interested party's position and by any information (wage payment data, project description, area practice material, etc.) that the requestor considers relevant to the issue.

3.) If the decision of the Administrator is not favorable, an interested party may appeal directly to the Administrative Review Board (formerly the Wage Appeals Board). Write to:

Administrative Review Board
U.S. Department of Labor
200 Constitution Avenue, N.W.
Washington, DC 20210

4.) All decisions by the Administrative Review Board are final.

```
==========

          END OF GENERAL DECISION"
```